제2016 - 17069 호

안 전 인 증 서

(사업장명) 극동호이스트(주)

(소 재 지) (154-23)경기 안산 단원구 해봉로 119 (성곡동 630-2)

위 사업장에서 제조하는 아래의 품목이 산업안전보건법 제34조 및 같은 법 시행규칙 제58조의4제4항에 따른 안전인증 심사 결과 안전·보건기준에 적합하므로 안전인증표시의 사용을 허가합니다.

품 목

호이스트

형식,모델(용량,등급)/인증번호

KDC3-L (3.0Ton) /16-AE2AC-10323 / 16-AE2AC-10323

인 증 기 준

고용노동부 고시 제2015 - 20호 (위험기계·기구 안전인증 고시)

인 증 조 건

설치장소 : 옥내, 옥외

2016년 06월 23일

한국산업안전보건공단이사장

심사결과 통지서

신청인	사업장명	극동호이스트(주)	사업장관리번호	134-81-013350
	사업자등록번호	134-81-01335	대표자 성명	최성찬
	소재지	(154 - 23) 경기 안산 단원구 해봉로 119 (성곡동 630-2)		

안전인증대상 기계·기구명	호이스트		
형 식 (규 격)	KDC3-L	용 량 (등 급)	3.0 Ton

산업안전보건법 제 34조 및 같은 법 시행규칙 제58조의4에 따라 실시한

[ ] 예비심사

[√] 서면심사

[ ] 기술능력 및 생산체계 심사

[ ] 개별 제품심사

[ ] 개별 제품심사(제작중)

[ ] 형식별 제품심사

결과가 [√] 적 합 / [ ] 부적합 함을 통지합니다.

2016년 06월 13일

인증심사원 박찬성 (서명 또는 인) 박찬성

한국산업안전보건공단 중부지역본부장

불법복제 및 배포금지

서 면 심 사 서 류

형식 번호 : KDC3-L

극 동 호 이 스 트 ㈜

工場 : 경기도 안산시 단원구 해봉로 119 (성곡동)

電話 : 031) 491 - 5311

FAS : 031) 494 - 5315

동 일 형 식 일 람 표

사업장명	극동호이스트㈜	개정일자 및 번호		인증번호	
형식 및 모델		동일 형식 인정범위 및 내역			비 고
형식	모델	권상속도(m/min)	횡행속도(m/min)	양정(m)	횡행방식
KDC3-L	KDC3-L6-L	고속 : 9(m/min)	고속: 24(m/min)	6	모터구동식
	KDC3-L9-L		저속: 16(m/min)	9	
	KDC-L12-L	CREEP : 0.9(m/min)	듀얼고속:24/12(m/min)	12	
			듀얼저속:16/8(m/min)		

불법복제 및 배포금지

불법복제 및 배포금지

방호장치의 성능검사 합격증 사본

심사필
KCS
한국산업안전보건공단

불법복제 및 배포금지

제 2012-BJ-0009 호

안 전 인 증 서

정호엔지니어링

경기도 광명시 노동사동 440-5

위 사업장에서 제조하는 아래의 품목이 산업안전보건법 제34조 및 같은 법 시행규칙 제58조의4제4항에 따른 안전인증 심사 결과 안전·보건기준에 적합하므로 안전인증표시의 사용을 인증합니다.

품 목

양중기용 과부하방지장치

형식·모델/용량·등급/인증번호

형식·모델	용량·등급	인증번호
JDL-100	J-2	12-AV2BJ-0009

인 증 기 준

방호장치 의무안전인증 고시(고용노동부고시 제2010-36호)

인 증 조 건

아래 주소에서 생산되는 제품에 한함.

정호엔지니어링, 경기도 광명시 노동사동 440-5

2012년 06월 11일

한국산업안전보건공단 이사장

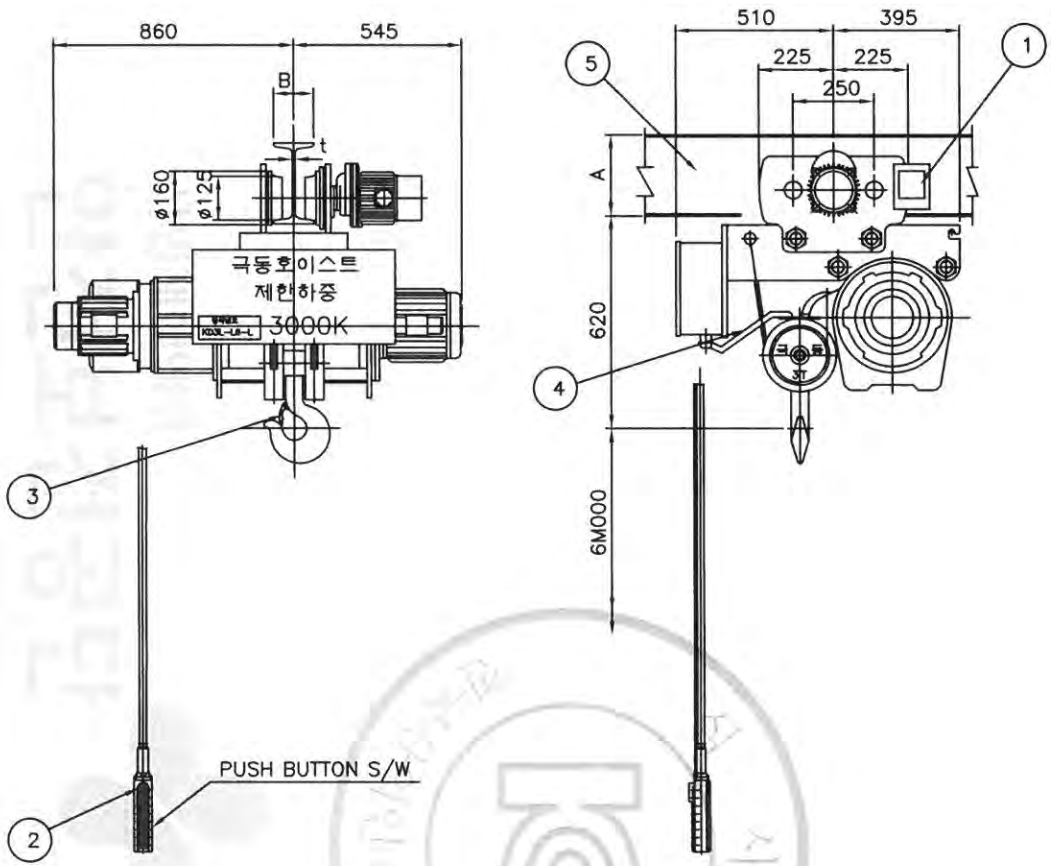

SPECIFICATION			
RATED LOAD		3000 KG	
TESTING LOAD		3750 KG	
LIFT		6 M	
RATING		30 MIN	
HOISTING	SPEED	9/0.9 M/MIN	
	MOTOR	5.5/1.5 KW x 4 P	
TRAVERSING	HIGH	SPEED	24 M/MIN
		MOTOR	0.75 KW x 4 P
	LOW	SPEED	16 M/MIN
		MOTOR	0.5 KW x 6 P
	DUAL HIGH	SPEED	24/10
		MOTOR	0.8/0.4 KW x 4/8 P
	DUAL LOW	SPEED	16/8 M/MIN
		MOTOR	0.5/0.25 KW x 6/12 P
WIRE ROPE		(6x36) ø9 x 4 FALLS	
POWER SOURCE		AC3ø 220V(380,440,460,480) 60Hz	
COLOR		10 B 3/5	
WEIGHT		545 KG	

NO.	DESCRIPTIONS	MT'L	SET QT'Y	SET QT'Y	UNIT WEIGHT KG.	TOTAL WEIGHT KG.	REAMERKS
5	I-BEAM	SS41		-			TABLE 참조
4	UPPER LIMIT S/W	SS41		1			
3	SAFETY LATCH	SPC		1			
2	EMERGENCY S/W	—		1			
1	LOAD LIMITER	—		1			

TRAVERSING I - BEAM A x B x t	Ix (Cm^4)	Zx (Cm^3)	SUPPORT LENGTH
I 250 x 125 x 7.5/12.5	5180	414	MAX. 3.7M
I 300 x 150 x 10/18.5	12700	849	MAX. 5.9M
I 350 x 150 x 9/15	15200	870	MAX. 6.4M
I 400 x 150 x 10/18	24100	1200	MAX. 8.1M

PROJECT				DATE 19 . . .
TITLE	KDC3-L6-L ARRANGEMENT DRAWING FOR HOIST			SCALE A3/20 /
DRAWN	DESIGNED	CHECKED	APPROVED	REF DRAWING
극동호이스트 주식회사 KUK DONG HOIST CO., LTD.			SHEET NO.	DRAWING NO. KDC3L600

본 문서는 배포 및 복제 금지

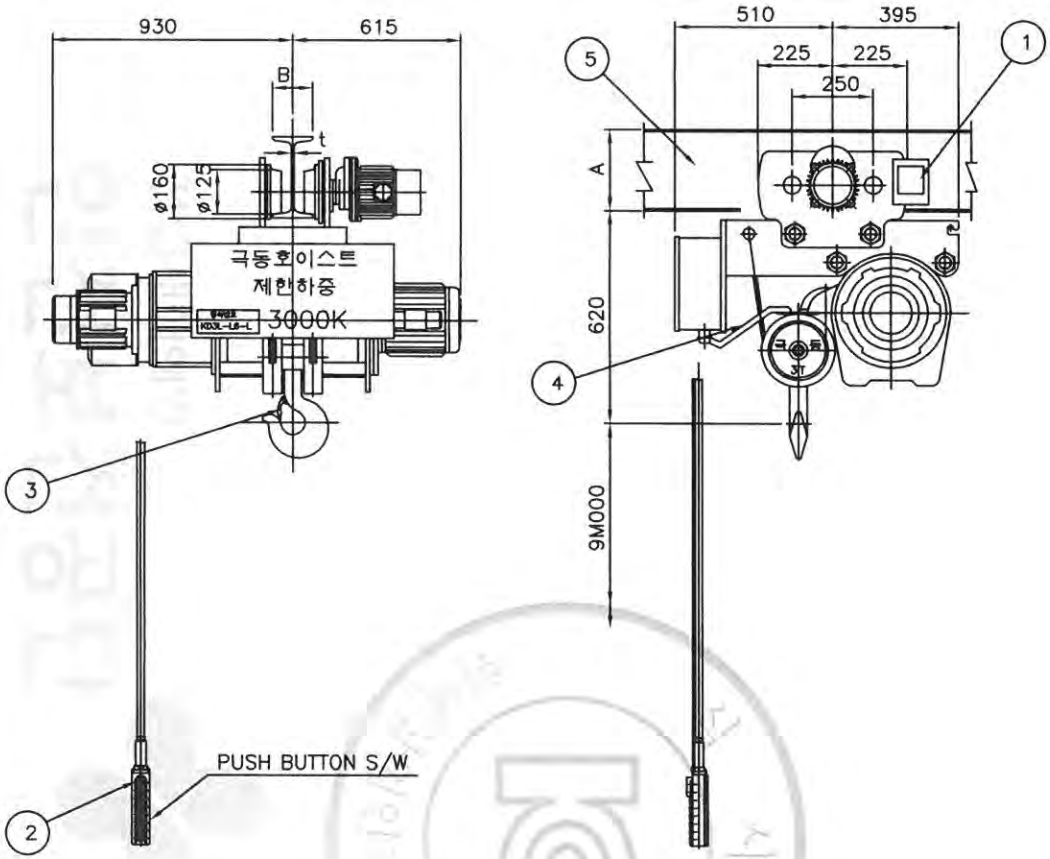

SPECIFICATION			
RATED LOAD		3000 KG	
TESTING LOAD		3750 KG	
LIFT		9 M	
RATING		30 MIN	
HOISTING	SPEED	9/0.9 M/MIN	
	MOTOR	5.5/1.5 KW x 4 P	
TRAVERSING	HIGH	SPEED	24 M/MIN
		MOTOR	0.75 KW x 4 P
	LOW	SPEED	16 M/MIN
		MOTOR	0.5 KW x 6 P
	DUAL HIGH	SPEED	24/10
		MOTOR	0.8/0.4 KW x 4/8 P
	DUAL LOW	SPEED	16/8 M/MIN
		MOTOR	0.5/0.25 KW x 6/12 P
WIRE ROPE		(6x36) ø9 x 4 FALLS	
POWER SOURCE		AC3ø 220V(380,440,460,480) 60Hz	
COLOR		10 B 3/5	
WEIGHT		605 KG	

NO.	DESCRIPTIONS	MT'L	SET QT'Y	SET QT'Y	UNIT WEIGHT KG.	TOTAL WEIGHT KG.	REAMERKS
5	I-BEAM	SS41		-			TABLE 참조
4	UPPER LIMIT S/W	SS41		1			
3	SAFETY LATCH	SPC		1			
2	EMERGENCY S/W	—		1			
1	LOAD LIMITER	—		1			

PROJECT				DATE 19 . . .
TITLE	KDC3-L9-L ARRANGEMENT DRAWING FOR HOIST			SCALE A3/20 /
DRAWN	DESIGNED	CHECKED	APPROVED	REF DRAWING
극동호이스트 주식회사 KUK DONG HOIST CO., LTD.			SHEET NO.	DRAWING NO. KDC3L900

TRAVERSING I - BEAM A x B x t	Ix (Cm^4)	Zx (Cm^3)	SUPPORT LENGTH
I 250 x 125 x 7.5/12.5	5180	414	MAX. 3.7M
I 300 x 150 x 10/18.5	12700	849	MAX. 5.9M
I 350 x 150 x 9/15	15200	870	MAX. 6.4M
I 400 x 150 x 10/18	24100	1200	MAX. 8.1M

사용표배 금 배포금지

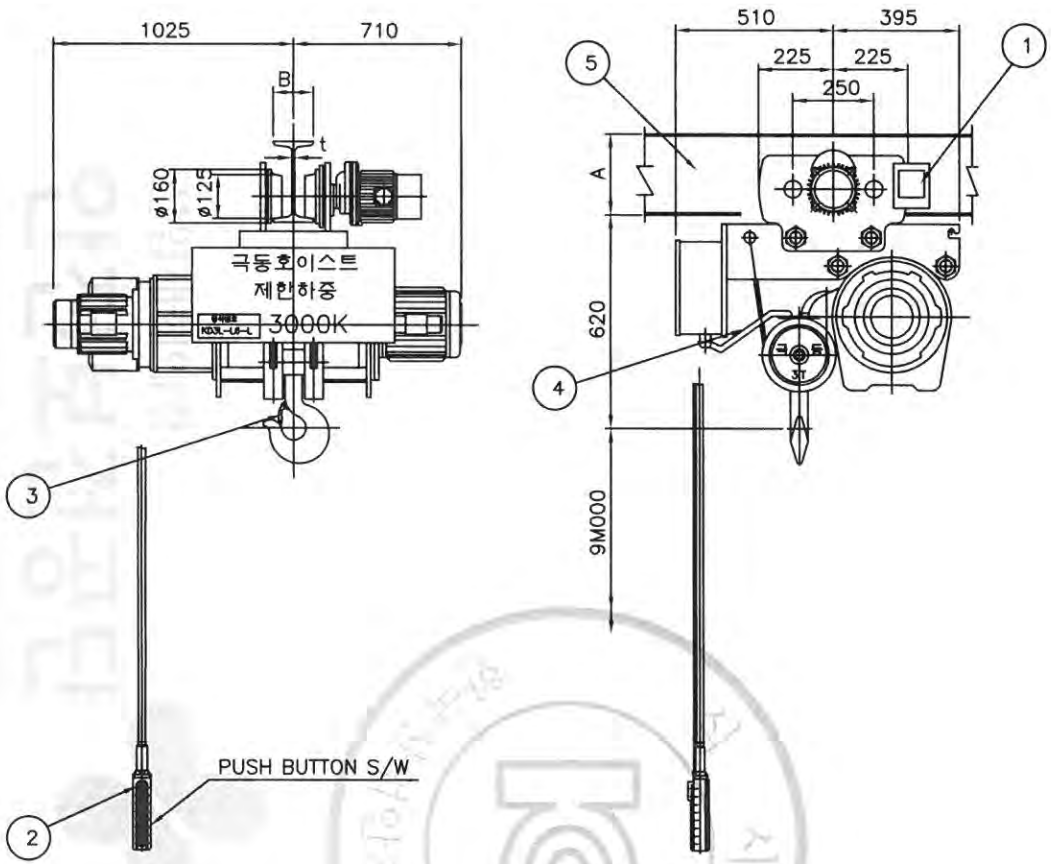

SPECIFICATION			
RATED LOAD		3000 KG	
TESTING LOAD		3750 KG	
LIFT		12 M	
RATING		30 MIN	
HOISTING	SPEED	9/0.9 M/MIN	
	MOTOR	5.5/1.5 KW x 4 P	
TRAVERSING	HIGH	SPEED	24 M/MIN
		MOTOR	0.75 KW x 4 P
	LOW	SPEED	16 M/MIN
		MOTOR	0.5 KW x 6 P
	DUAL HIGH	SPEED	24/10
		MOTOR	0.8/0.4 KW x 4/8 P
	DUAL LOW	SPEED	16/8 M/MIN
		MOTOR	0.5/0.25 KW x 6/12 P
WIRE ROPE		(6x36) ø9 x 4 FALLS	
POWER SOURCE		AC3ø 220V(380,440,460,480) 60Hz	
COLOR		10 B 3/5	
WEIGHT		665 KG	

NO.	DESCRIPTIONS	MT'L	SET QT'Y	SET QT'Y	UNIT WEIGHT KG.	TOTAL WEIGHT KG.	REAMERKS
5	ㄱ-BEAM	SS41		-			TABLE 참조
4	UPPER LIMIT S/W	SS41		1			
3	SAFETY LATCH	SPC		1			
2	EMERGENCY S/W	—		1			
1	LOAD LIMITER	—		1			

TRAVERSING I - BEAM A x B x t	Ix (Cm^4)	Zx (Cm^3)	SUPPORT LENGTH
I 250 x 125 x 7.5/12.5	5180	414	MAX. 3.7M
I 300 x 150 x 10/18.5	12700	849	MAX. 5.9M
I 350 x 150 x 9/15	15200	870	MAX. 6.4M
I 400 x 150 x 10/18	24100	1200	MAX. 8.1M

PROJECT				DATE 19 . . .
TITLE	KDC3-L12-L ARRANGEMENT DRAWING FOR HOIST			SCALE A3/20 /
DRAWN	DESIGNED	CHECKED	APPROVED	REF DRAWING
극동호이스트 주식회사 KUK DONG HOIST CO., LTD.			SHEET NO.	DRAWING NO. KDC3L900

본 문서는 배포 금지

1	2	3	4	5	6	7	8	9	10	11	12	13	14	15	16	17	18	19	20.

ADR'S NO.

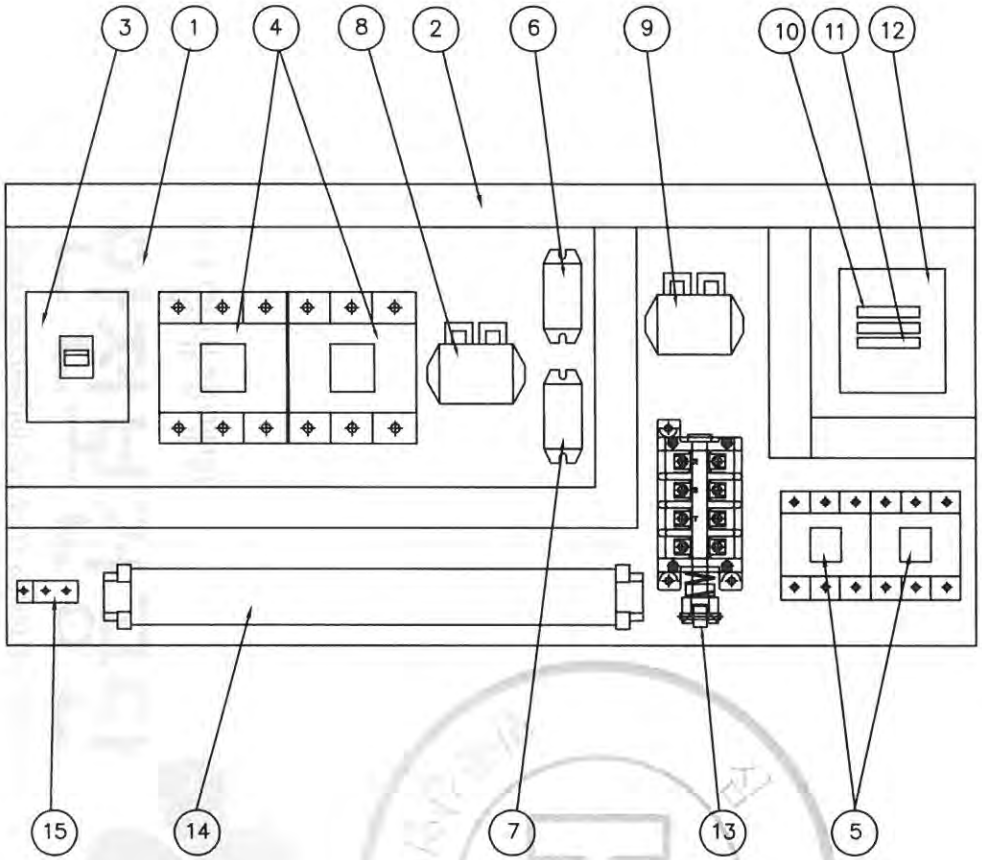

NO	DESCRIPTION	SPECIFICATION	Q'TY	REMARK
1	CHASSIS PLATE		1	아 연 도 금
2	CABLE DUCT	–	1	
3	MCCB100	53AF/40AT	1	HOISTING
4	MAGNET CONTACT	DMC65C	2	HOISTING
5	MAGNET CONTACT	DMC22C	2	CREEP HOIST
6	SILICON RECTIFIER	SR–60	1	HOISTING
7	SILICON RECTIFIER	SR–30	1	CREEP HOIST
8	E.O.C.R	SS–30	1	HOISTING
9	E.O.C.R	SS–30	1	CREEP HOIST
10	FUSE F11,F12	2 A	2	
11	FUSE F13	3 A	1	
12	TRANSFORMER	220V/110V,120V, 100VA	1	
13	UPPER LIMITER	AC 600V, 75A	1	LS–1,2
14	TERMINAL BLOCK	60A,15A		
15	EARTH TERMINAL	3tx20x50	1	

NOTE

1. UPPER LIMIT LS–1,LS–2의 접점 허용 전류 용량. : AC 600V, 75A
2. POWER SOURCE : AC. 3ø 220V 60HZ
3. M1 * OWNER SCOPE (CRANE 용 HOIST 제작시)
   * MAKER SCOPE (MONORAIL 용 HOIST 제작시)

NOTE

1. 전선의 색상은 다음과 같다.
   1) 흑색 : 교류및 직류전원선
   2) 적색 : 교류제어선
   3) 주황색 : 외부에서 공급되는 연동장치 제어회로
   4) 녹색 또는 녹색과 노랑 혼용 : 접지선
   5) 청색 : 직류제어회로
2. CABLE MATERIAL : KIV OR EQUIVALENT
   MIN SIZE : 2.5sq
3. 제어용 전선 : 2.5mm KIV,HIV
4. 제작시 다소 변경 될수있음.
5. 외함 개방구조는 다음과 같을것.
   1) 외함 개방시 충전부분이 차단되도록 할것.
   2) 외함 개방후 충전되어있는 부분은 IP2X 이상의 직접 접촉 방호가 되어있을것.

불법복제 및 배포금지

MK	DATE	REVISIONS	CHK.	APP.
4				
3				
2				
1				

CUSTOMER		DRAWING	DESIGN	CHECKED	APPROVED	SCALE	DATE	ORDER NO.
DRAWING TITLE	CREEP HOIST CONTROL BOX ARRANGEMENT DRAWING					NONE		
		극동호이스트 주식회사 KUK DONG HOIST CO., LTD.				DWG. NO	KDC03BA21	

1	2	3	4	5	6	7	8	9	10	11	12	13	14	15	16	17	18	19	20.

ADR'S NO.

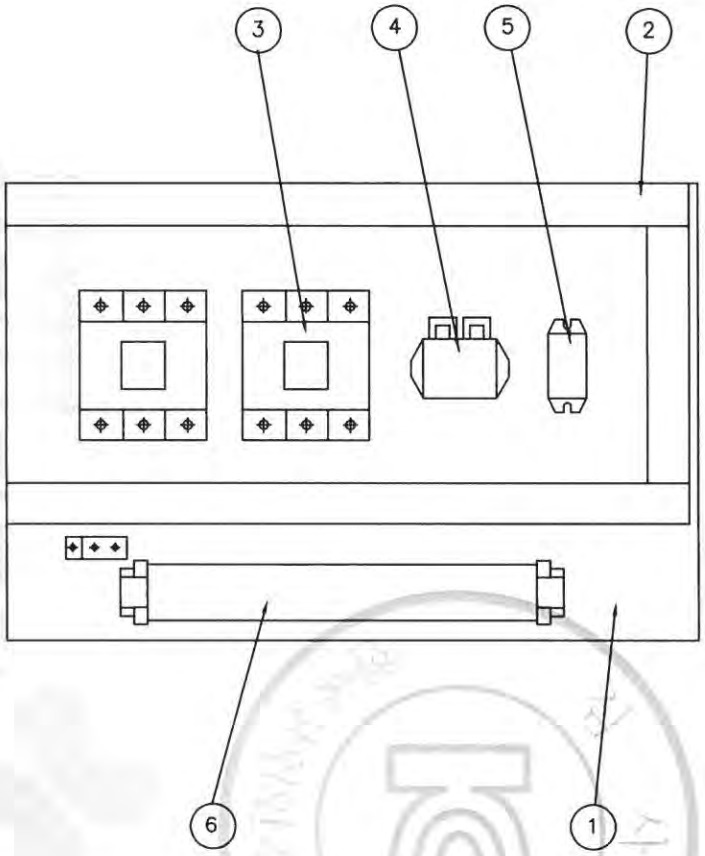

NO	DESCRIPTION	SPEC	Q'TY	REMARK
1	CHASSIS PLATE	–	1	아 연 도 금
2	CABLE DUCT	–	1	
3	MAGNET CONTACT	DMC22C	2	TRAVERSING
4	E.O.C.R	SS–05	1	TRAVERSING
5	SILICON RECTIFIER	SR–30	1	TRAVERSING
6	TERMINAL BLOCK	25A , 15A	1	TRAVERSING

NOTE
1. 전선의 색상은 다음과 같다.
   1) 흑색 : 교류및 직류전원선
   2) 적색 : 교류제어선
   3) 주황색 : 외부에서 공급되는 연동장치 제어회로
   4) 녹색 또는 녹색과 노랑 혼용 : 접지선
   5) 청색 : 직류제어회로
2. CABLE MATERIAL : KIV OR EQUIVALENT, MIN SIZE : 2.5sq
3. 제어용 전선 : 2.5mm KIV,HIV
4. 제작시 다소 변경 될수있음.
5. 외함 개방구조는 다음과 같을것.
   1) 외함 개방시 충전부분이 차단되도록 할것.
   2) 외함 개방후 충전되어있는 부분은 IP2X 이상의 직접 접촉 방호가 되어있을것.

MK	DATE	REVISIONS	CHK.	APP.
4				
3				
2				
1				

CUSTOMER	
DRAWING TITLE	TRAVERSING POWER CONTROL BOX ARRANGEMENT DRAWING

DRAWING	DESIGN	CHECKED	APPROVED	SCALE	DATE	ORDER NO.
				NONE		

극동호이스트 주식회사
KUK DONG HOIST CO., LTD.

DWG. NO

무단복제 및 배포금지

1	2	3	4	5	6	7	8	9	10	11	12	13	14	15	16	17	18	19	20
POWER CIRCUIT																			ADR'S NO.
HOISTING MOTION										CREEP HOIST MOTION									B1

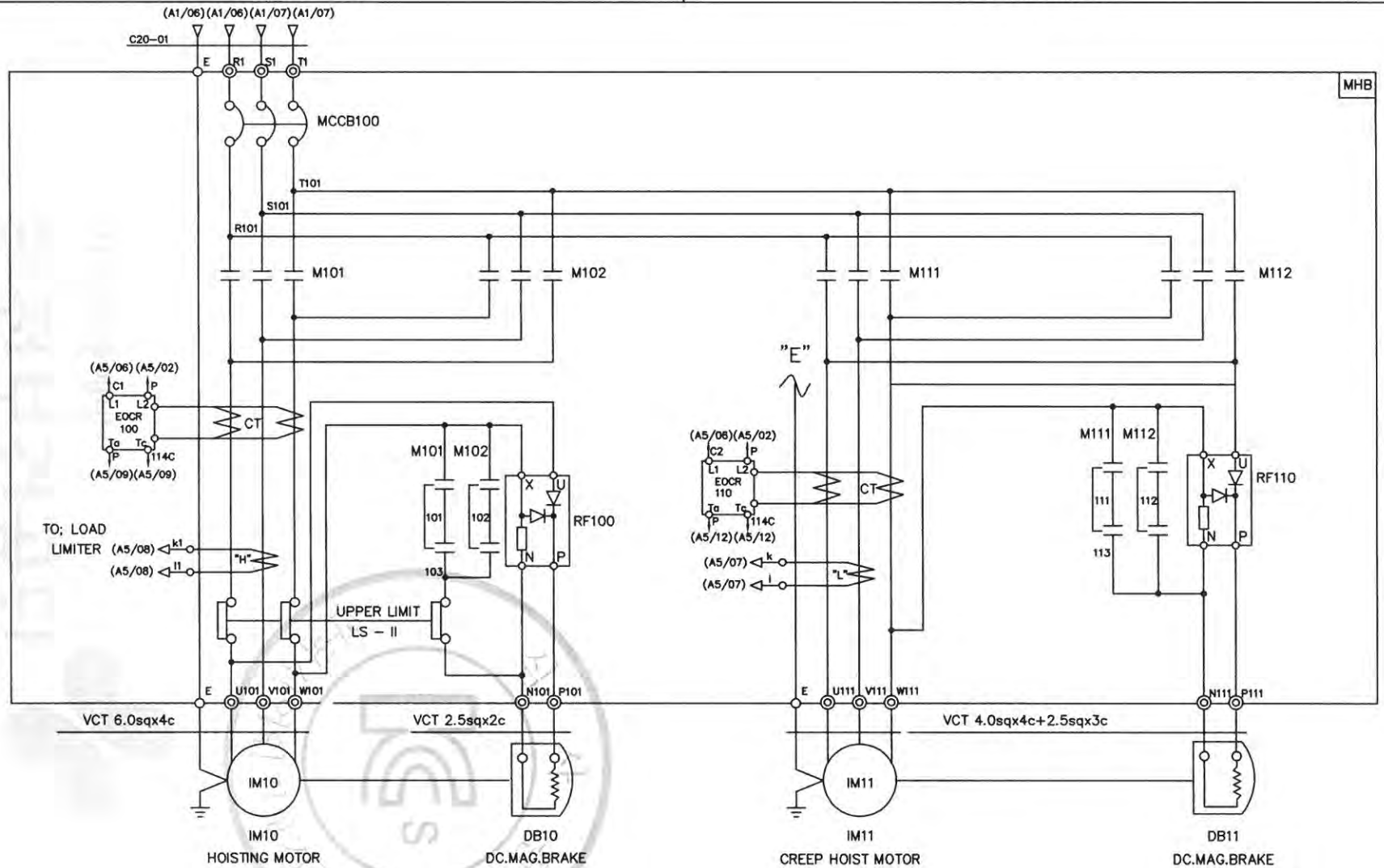

SPECIFICATION / SYMBOLS	HOISTING POWER	HOISTING MOTOR	CREEP MOTOR	DC.MAG' BRAKE	NO FUSE BREAKER	TRANSFORMER	FUSE		MAGNET CONTACTOR		UPPER LIMIT	ELECTRIC OVER CURRENT RELAY		SILICON RECTIFIER		LOAD LIMITER	CABLE
DESCRIPTION	HOIST	IM 10	IM 11	DB10, 11	MCCB100	TR 1	F11,F12	F13	M101,M102	M111,M112	LS-I, LS-II	EOCR100	EOCR110	RF100	RF110	LOAD LIMITER	C20-01
	3TON AC3PH 220V 60Hz	5.5KWx4P	1.1KWx4P	DC 100V	ABS-53AF/40A	220/110V,120V,100VA	2A	3A	DMC65C	DMC22C	AC 600V 75A	SS-30	SS-30	SR-60	SR-30	JDL-100	VFCT 10sqx4c
SELECTION / MAKER	KUKDONG				LS	SHINHAN	-		DONG-A		KUK DONG	ASAN				JUNGHO	DONGIL

MK	DATE	REVISIONS	CHK.	APP.
4				
3				
2				
1				

CUSTOMER		DRAWING	DESIGN	CHECKED	APPROVED	SCALE	DATE	ORDER NO.
DRAWING TITLE	CREEP HOISTING POWER & CONTROL					NONE		
	CIRCUIT DIAGRAM	KD 극동호이스트 주식회사 KUK DONG HOIST CO., LTD.				DWG. NO	KDC3E22	

불법복제 및 배포금지

1	2	3	4	5	6	7	8	9	10	11	12	13	14	15	16	17	18	19	20
POWER CIRCUIT																			ADR'S NO.
TRAVERSING MOTION																			C1

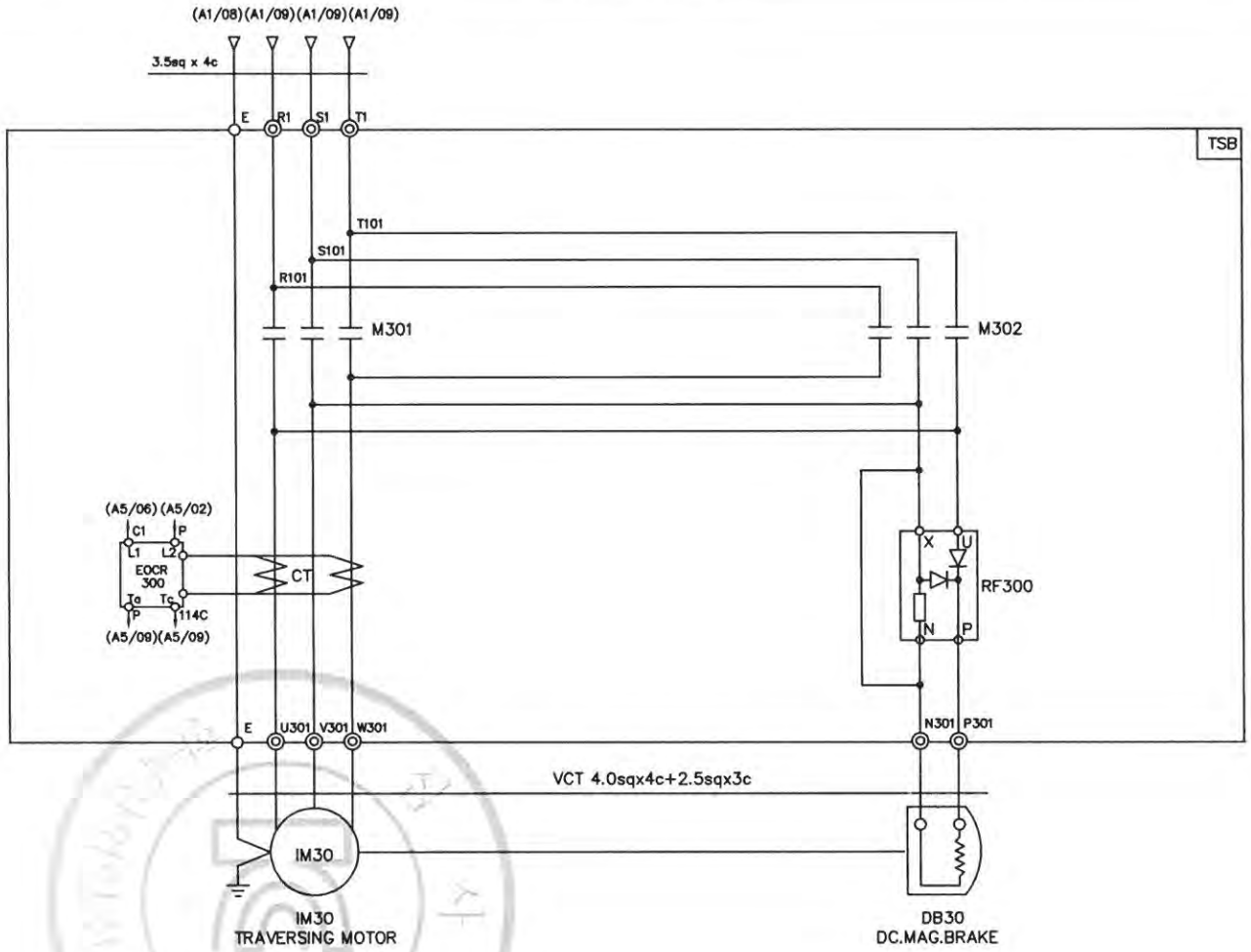

SPECIFICATION / SYMBOLS / DESCRIPTION	TRAVERSING MOTOR	DC MAG' BRAKE	MAGNET CONTACTOR	SILICON RECTIFIER	ELECTRIC OVER CURRENT RELAY	LIMIT SWTCH
	IM 30	DB 30	M301 , M302	RF 300	EOCR 300	LS-301 , LS-302
	0.75KW x 4P AC 3PH 220V 60Hz	DC 100V	DMC22C	SR-30	SS-05	HY - W904
	0.5KW x 6P AC 3PH 220V 60Hz	DC 100V	DMC22C	SR-30	SS-05	HY - W904
SELECTION MAKER	KUKDONG		DONG-A	ASAN		

MK	DATE	REVISIONS	CHK.	APP.
4				
3				
2				
1				

CUSTOMER		DRAWING	DESIGN	CHECKED	APPROVED	SCALE	DATE	ORDER NO.
DRAWING TITLE	TRAVERSING POWER CONTROL CIRCUIT DIAGRAM					NONE		
		극동호이스트 주식회사 KUK DONG HOIST CO., LTD.				DWG. NO	KDC3E23	

불법복제 및 배포금지

1	2	3	4	5	6	7	8	9	10	11	12	13	14	15	16	17	18	19	20
POWER CIRCUIT																			ADR'S NO.
TRAVERSING MOTION																			C2

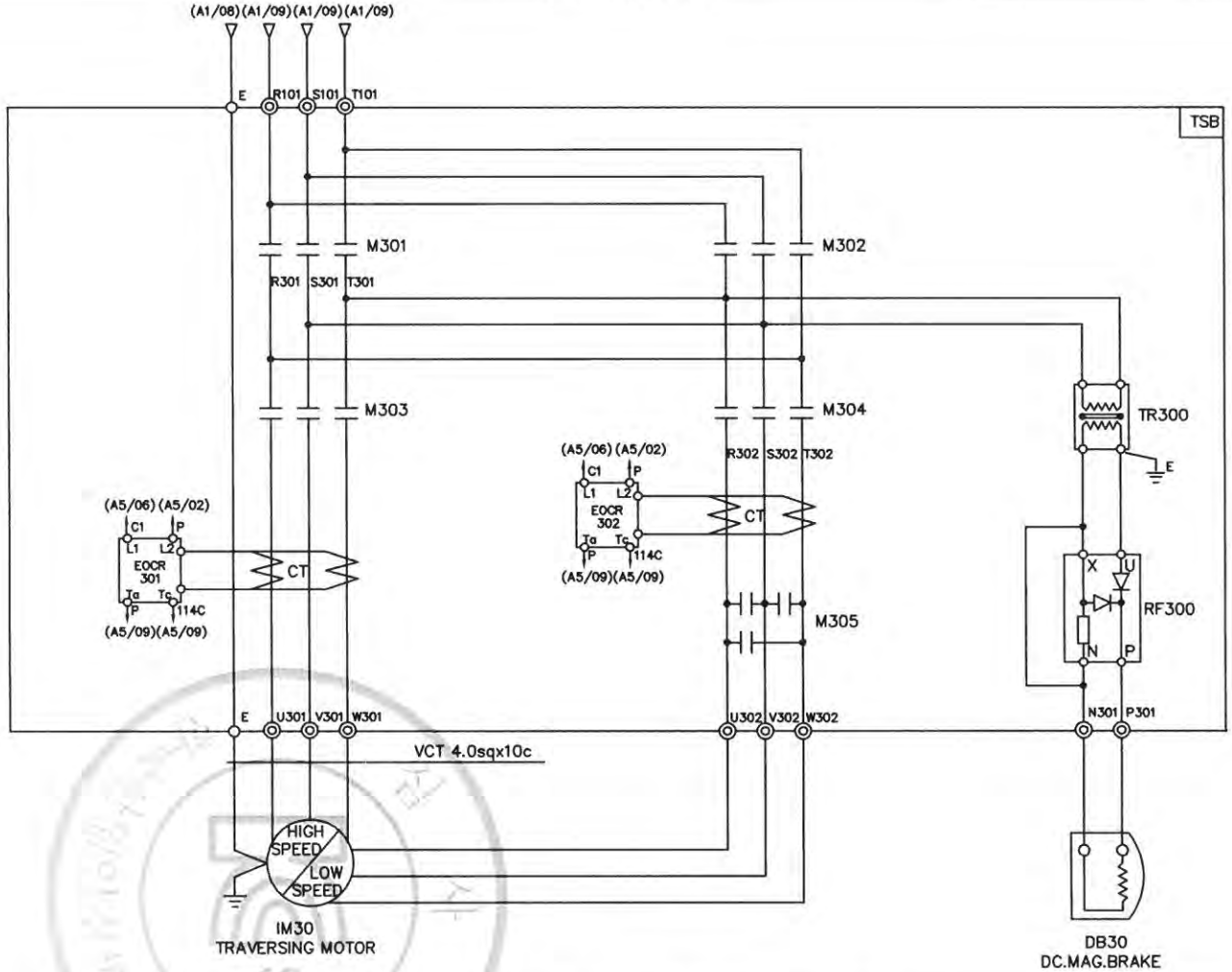

SPECIFICATION / SYMBOLS / DESCRIPTION		TRAVERSING MOTOR	DC MAG' BRAKE	MAGNET CONTACTOR		SILICON RECTIFIER	ELECTRIC OVER CURRENT RELAY	TRANSFORMER
		IM 30	DB30	M301 , M302 , M303	M304 , M305	RF 300	EOCR 301,302	TR300
	220V	0.5/0.25KWx6/12P AC3PH 220V 60Hz	DC 100V	DMC22C	DMC22C	SR-30	SS-05	AC220/220V, 300VA
	220V	0.8/0.4KWx4/8P AC3PH 220V 60Hz	DC 100V	DMC22C	DMC22C	SR-30	SS-05	AC220/220V, 300VA
SELECTION MAKER		KUKDONG		DONG-A		ASECO		SHINHAN

MK	DATE	REVISIONS	CHK.	APP.
4				
3				
2				
1				

CUSTOMER		DRAWING	DESIGN	CHECKED	APPROVED	SCALE	DATE	ORDER NO.
DRAWING TITLE	TRAVERSING POWER CONTROL CIRCUIT DIAGRAM					NONE		
		극동호이스트 주식회사 KUK DONG HOIST CO., LTD.				DWG. NO	KDC3E25	

불법복제 및 배포금지

1	2	3	4	5	6	7	8	9	10	11	12	13	14	15	16	17	18	19	20.

ADR'S NO.

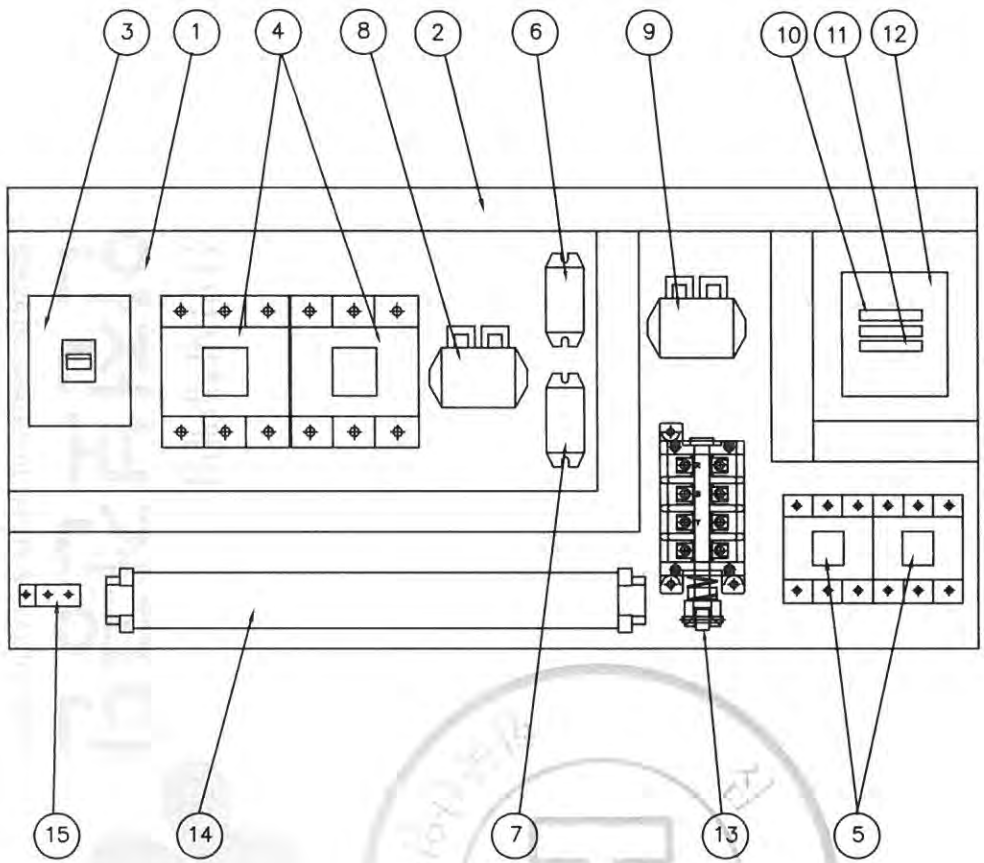

NO	DESCRIPTION	SPECIFICATION	Q'TY	REMARK
1	CHASSIS PLATE		1	아 연 도 금
2	CABLE DUCT	–	1	
3	MCCB100	33AF/20AT	1	HOISTING
4	MAGNET CONTACT	DMC40C	2	HOISTING
5	MAGNET CONTACT	DMC22C	2	CREEP HOIST
6	SILICON RECTIFIER	SR-60	1	HOISTING
7	SILICON RECTIFIER	SR-30	1	CREEP HOIST
8	E.O.C.R	SS-30	1	HOISTING
9	E.O.C.R	SS-05	1	CREEP HOIST
10	FUSE F11,F12	1 A	2	
11	FUSE F13	3 A	1	
12	TRANSFORMER	380V/110V,120V 100VA	1	
13	UPPER LIMITER	AC 600V, 75A	1	LS-1,2
14	TERMINAL BLOCK	60A,15A		
15	EARTH TERMINAL	3tx20x50	1	

NOTE

1. UPPER LIMIT LS-1,LS-2의 접점 허용 전류 용량. : AC 600V, 75A
2. POWER SOURCE : AC. 3ø 380V 60HZ
3. M1 * OWNER SCOPE (CRANE 용 HOIST 제작시)
   * MAKER SCOPE (MONORAIL 용 HOIST 제작시)

NOTE

1. 전선의 색상은 다음과 같다.
   1) 흑색 : 고류및 직류전원선
   2) 적색 : 고류제어선
   3) 주황색 : 외부에서 공급되는 연동장치 제어회로
   4) 녹색 또는 녹색과 노랑 혼용 : 접지선
   5) 청색 : 직류제어회로
2. CABLE MATERIAL : KIV OR EQUIVALENT
   MIN SIZE : 2.5sq
3. 제어용 전선 : 2.5mm KIV,HIV
4. 제작시 다소 변경 될수있음.
5. 외함 개방구조는 다음과 같을것.
   1) 외함 개방시 충전부분이 차단되도록 할것.
   2) 외함 개방후 충전되어있는 부분은 IP2X 이상의 직접 접촉 방호가 되어있을것.

MK	DATE	REVISIONS	CHK.	APP.
4				
3				
2				
1				

CUSTOMER	
DRAWING TITLE	CREEP HOIST CONTROL BOX ARRANGEMENT DRAWING

DRAWING	DESIGN	CHECKED	APPROVED	SCALE	DATE	ORDER NO.
				NONE		

극동호이스트 주식회사
KUK DONG HOIST CO., LTD.

DWG. NO KDC03BA31

불법복제 및 배포금지

1	2	3	4	5	6	7	8	9	10	11	12	13	14	15	16	17	18	19	20.

ADR'S NO.

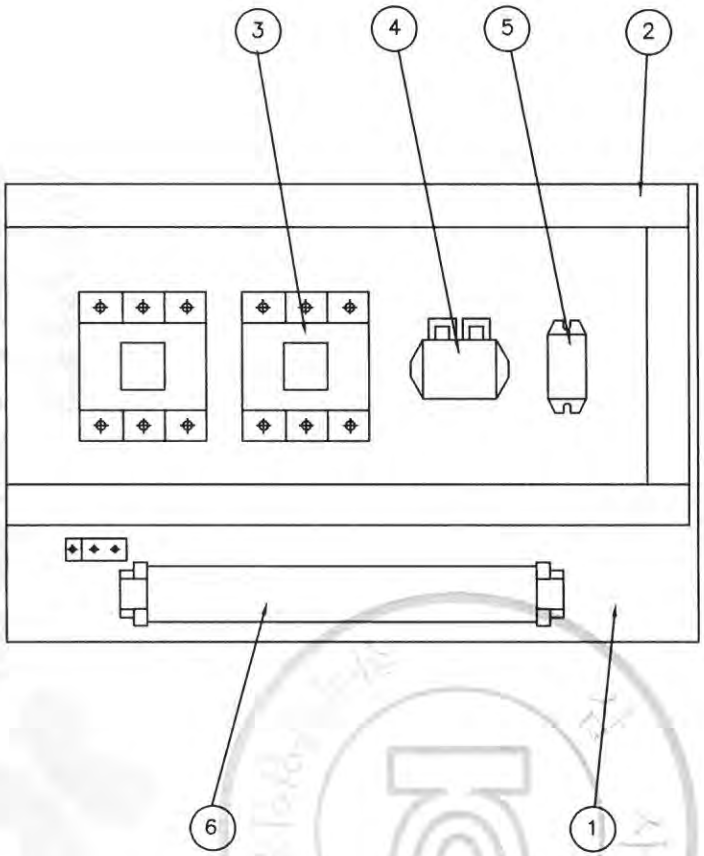

NO	DESCRIPTION	SPEC	Q'TY	REMARK
1	CHASSIS PLATE	–	1	아 연 도 금
2	CABLE DUCT	–	1	
3	MAGNET CONTACT	DMC22C	2	TRAVERSING
4	E.O.C.R	SS–05	1	TRAVERSING
5	SILICON RECTIFIER	SR–30	1	TRAVERSING
6	TERMINAL BLOCK	25A , 15A	1	TRAVERSING

NOTE 1. 전선의 색상은 다음과 같다.
1) 흑색 : 고류및 직류전원선 5) 청색 : 직류제어회로
2) 적색 : 교류제어선
3) 주황색 : 외부에서 공급되는 연동장치 제어회로
4) 녹색 또는 녹색과 노랑 혼용 : 접지선
2. CABLE MATERIAL : KIV OR EQUIVALENT
MIN SIZE : 2.5sq
3. 제어용 전선 : 2.5mm KIV,HIV
4. 제작시 다소 변경 될수있음.
5. 외함 개방구조는 다음과 같을것.
1) 외함 개방시 충전부분이 차단되도록 할것.
2) 외함 개방후 충전되어있는 부분은 IP2X 이상의 직접 접촉 방호가 되어있을것.

무단배포금지

MK	DATE	REVISIONS	CHK.	APP.
4				
3				
2				
1				

CUSTOMER		DRAWING	DESIGN	CHECKED	APPROVED	SCALE	DATE	ORDER NO.
DRAWING TITLE	TRAVERSING POWER CONTROL BOX					NONE		
	ARRANGEMENT DRAWING					DWG. NO	KDC03bt32	

1	2	3	4	5	6	7	8	9	10	11	12	13	14	15	16	17	18	19	20
POWER CIRCUIT																			ADR'S NO.
HOISTING MOTION										CREEP HOIST MOTION									B1

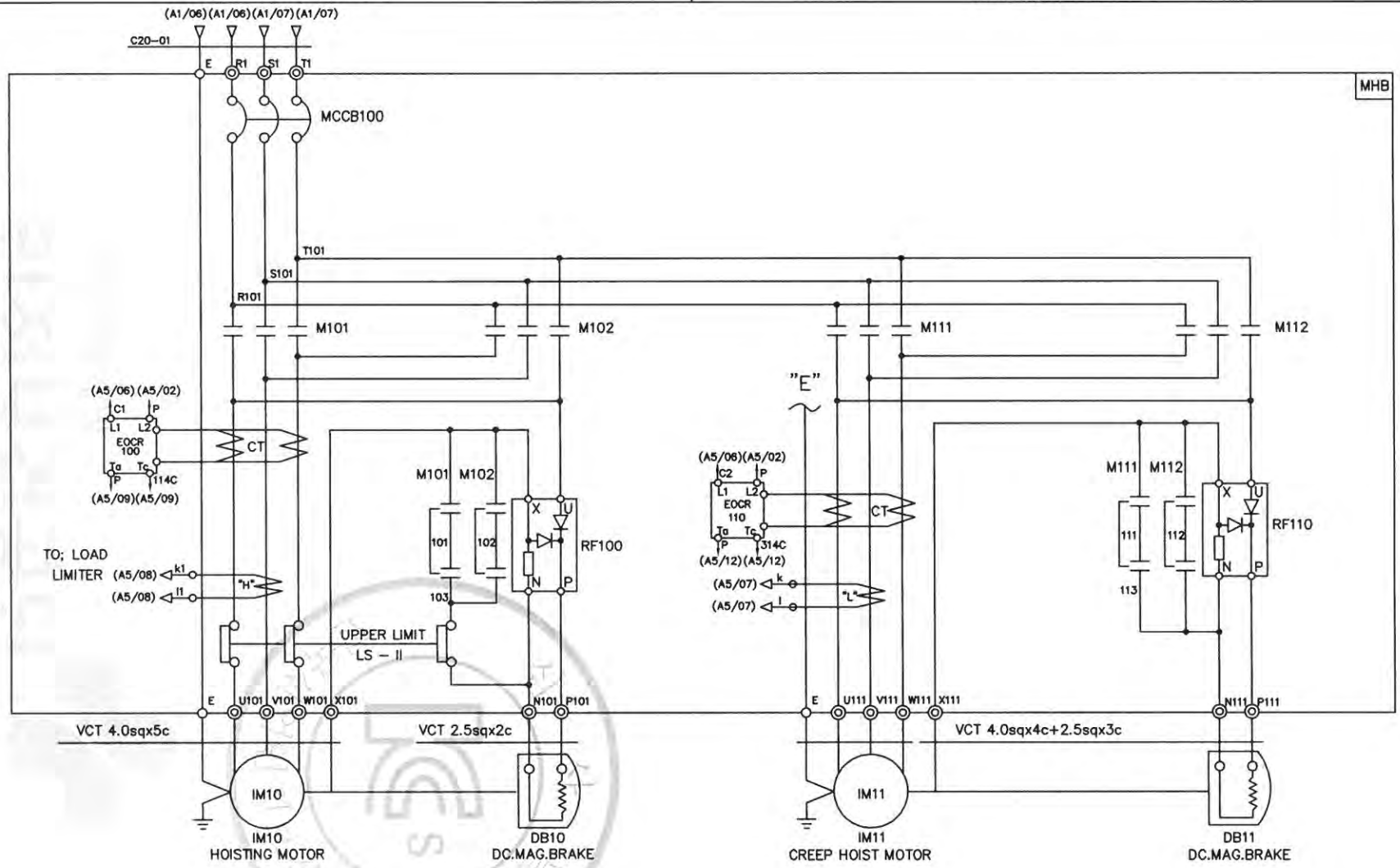

SPECIFICATION / SYMBOLS	HOISTING POWER	HOISTING MOTOR	CREEP MOTOR	DC.MAG' BRAKE	NO FUSE BREAKER	TRANSFORMER	FUSE		MAGNET CONTACTOR		UPPER LIMIT	ELECTRIC OVER CURRENT RELAY		SILICON RECTIFIER		LOAD LIMITER	CABLE
DESCRIPTION	HOIST	IM 10	IM 11	DB10, 11	MCCB100	TR 1	F11,F12	F13	M101,M102	M111,M112	LS-I, LS-II	EOCR100	EOCR110	RF100	RF110	LOAD LIMITER	C20-01
	3TON AC 3PH 380V 60Hz	5.5KWx4P	1.1KWx4P	DC 100V	ABE-33AF/20A	380V/110V,120V, 100VA	1A	3A	DMC40C	DMC22C	AC 600V 75A	SS-30	SS-05	SR-60	SR-30	JDL-100	VFCT 6.0sqx4c
SELECTION / MAKER	KUKDONG				LS	SHINHAN	-		DONG-A		KUKDONG	ASAN				JUNGHO	DONGIL

MK	DATE	REVISIONS	CHK.	APP.
4				
3				
2				
1				

CUSTOMER		DRAWING	DESIGN	CHECKED	APPROVED	SCALE	DATE	ORDER NO.
DRAWING TITLE	CREEP HOISTING POWER CONTROL CIRCUIT DIAGRAM					NONE		
		극동호이스트 주식회사 KUK DONG HOIST CO., LTD.				DWG. NO	KDC3E32	

불법복제 및 배포금지

1	2	3	4	5	6	7	8	9	10	11	12	13	14	15	16	17	18	19	20
POWER CIRCUIT																			ADR'S NO.
TRAVERSING MOTION																			C1

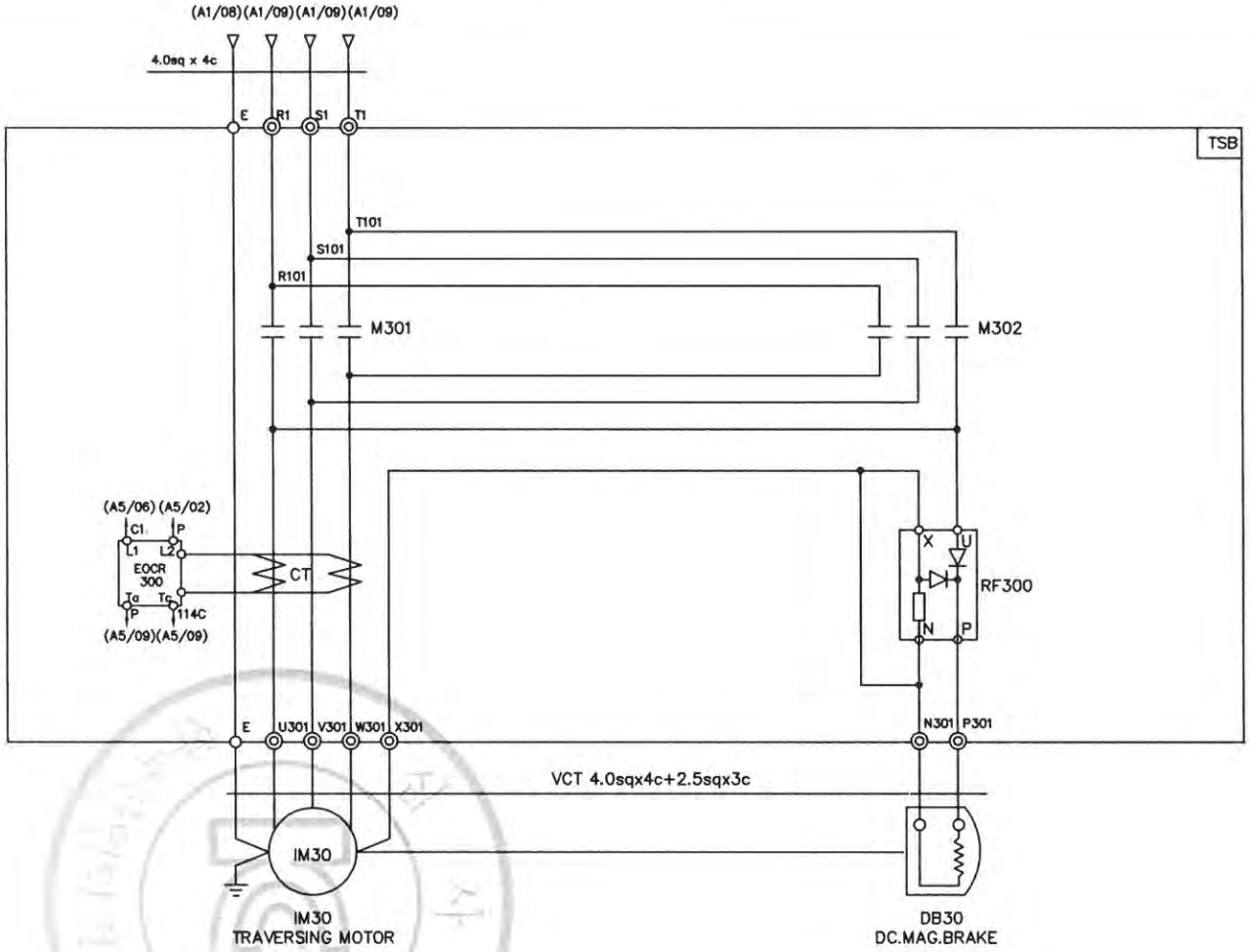

SPECIFICATION / SYMBOLS / DESCRIPTION	TRAVERSING MOTOR	DC MAG' BRAKE	MAGNET CONTACTOR	SILICON RECTIFIER	ELECTRIC OVER CURRENT RELAY	LIMIT SWTCH
	IM 30	DB 30	M301 , M302	RF 300	EOCR 300	LS-301 , LS-302
	0.75KW x 4P AC 3PH 380V 60Hz	DC 100V	DMC22C	SR-30	SS-05	HY - W904
	0.5KW x 6P AC 3PH 380V 60Hz	DC 100V	DMC22C	SR-30	SS-05	HY - W904
SELECTION MAKER	KUKDONG		DONG-A	ASECO		

MK	DATE	REVISIONS	CHK.	APP.
4				
3				
2				
1				

CUSTOMER		DRAWING	DESIGN	CHECKED	APPROVED	SCALE	DATE	ORDER NO.
DRAWING TITLE	TRAVERSING POWER CONTROL CIRCUIT DIAGRAM					NONE		
		KD 극동호이스트 주식회사 KUK DONG HOIST CO., LTD.				DWG. NO	KDC3E33	

불법복제 및 배포금지

1	2	3	4	5	6	7	8	9	10	11	12	13	14	15	16	17	18	19	20
POWER CIRCUIT																			ADR'S NO.
TRAVERSING MOTION																			C2

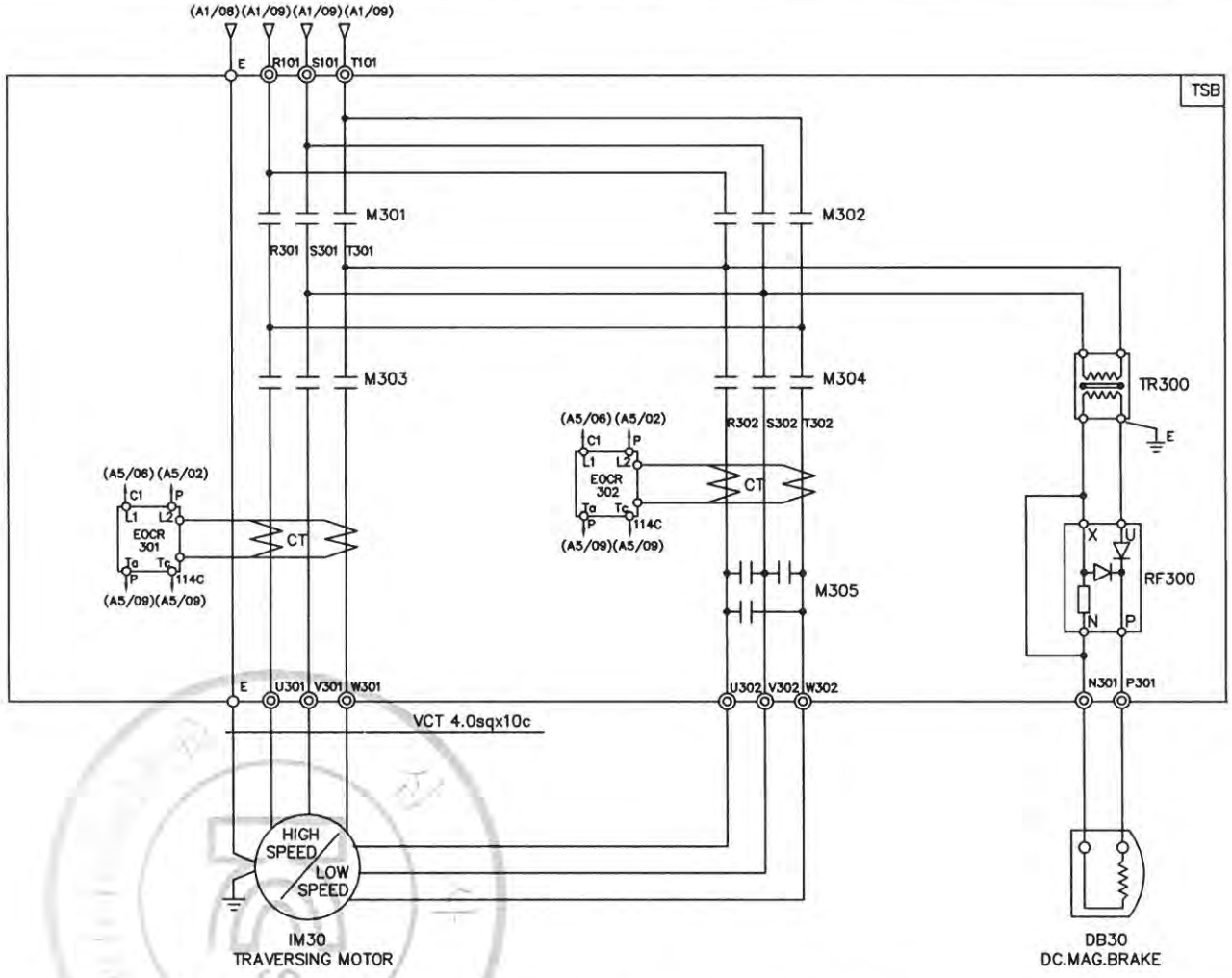

SPECIFICATION / SYMBOLS		TRAVERSING MOTOR	DC MAG' BRAKE	MAGNET CONTACTOR		SILICON RECTIFIER	ELECTRIC OVER CURRENT RELAY	TRANSFORMER
DESCRIPTION		IM 30	DB30	M301 , M302 , M303	M304 , M305	RF 300	EOCR 301,302	TR300
	380V	0.5/025KWx6/12P AC3PH 380V 60Hz	DC 100V	DMC22C	DMC22C	SR-30	SS-05	AC380/220V, 300VA
	380V	0.8/0.4KWx4/8P AC3PH 380V 60Hz	DC 100V	DMC22C	DMC22C	SR-30	SS-05	AC380/220V, 300VA
SELECTION / MAKER		KUKDONG		DONG-A		ASECO		SHINHAN

MK	DATE	REVISIONS	CHK.	APP.
4				
3				
2				
1				

CUSTOMER		DRAWING	DESIGN	CHECKED	APPROVED	SCALE	DATE	ORDER NO.
DRAWING TITLE	TRAVERSING POWER CONTROL CIRCUIT DIAGRAM					NONE		
		극동호이스트 주식회사 KUK DONG HOIST CO., LTD.				DWG. NO	KDC3E35	

불법복제 및 배포금지

1	2	3	4	5	6	7	8	9	10	11	12	13	14	15	16	17	18	19	20.

ADR'S NO.

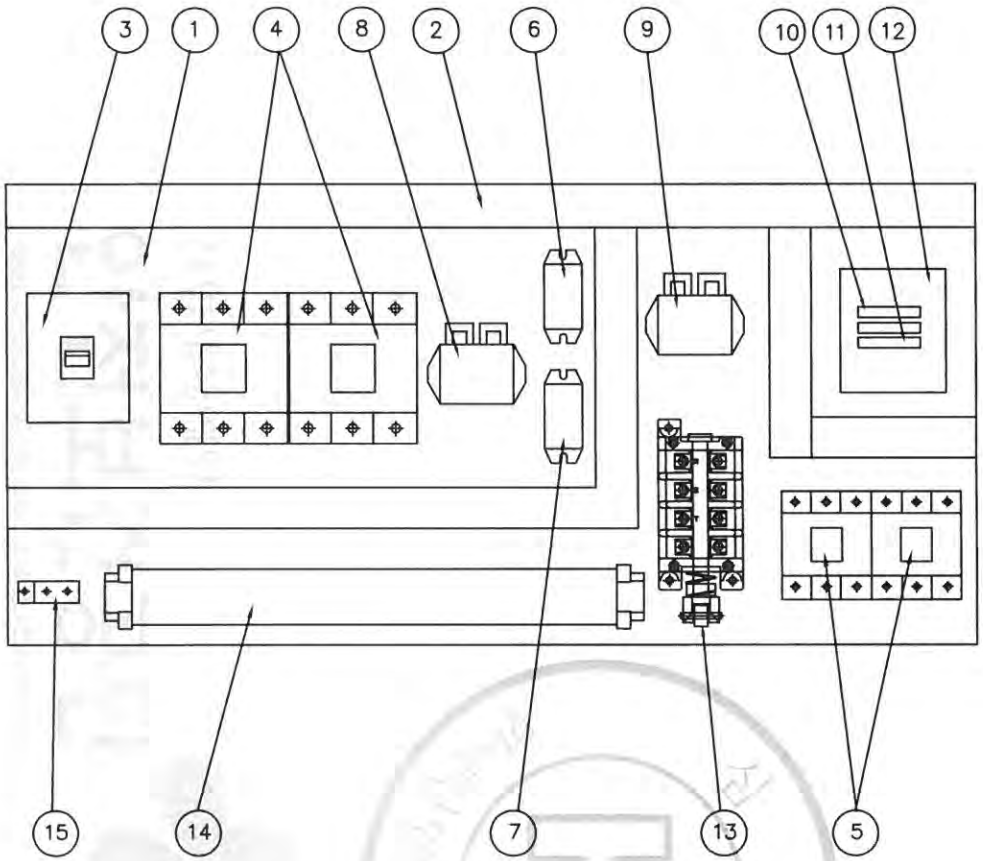

NO	DESCRIPTION	SPECIFICATION	Q'TY	REMARK
1	CHASSIS PLATE		1	아 연 도 금
2	CABLE DUCT	–	1	
3	MCCB100	33AF/20AT	1	HOISTING
4	MAGNET CONTACT	DMC40C	2	HOISTING
5	MAGNET CONTACT	DMC22C	2	CREEP HOIST
6	SILICON RECTIFIER	SR-60	1	HOISTING
7	SILICON RECTIFIER	SR-30	1	CREEP HOIST
8	E.O.C.R	SS-30	1	HOISTING
9	E.O.C.R	SS-05	1	CREEP HOIST
10	FUSE F11,F12	1 A	2	
11	FUSE F13	3 A	1	
12	TRANSFORMER	440V,460V/110V,120V 100VA	1	
13	UPPER LIMITER	AC 600V, 75A	1	LS-1,2
14	TERMINAL BLOCK	60A,15A		
15	EARTH TERMINAL	3tx20x50	1	

NOTE

1. UPPER LIMIT LS-1,LS-2의 접점 허용 전류 용량. : AC 600V, 75A
2. POWER SOURCE : AC. 3ø 440V 60HZ
3. M1 * OWNER SCOPE (CRANE 용 HOIST 제작시)
   * MAKER SCOPE (MONORAIL 용 HOIST 제작시)

NOTE

1. 전선의 색상은 다음과 같다.
   1) 흑색 : 고류및 직류전원선
   2) 적색 : 고류제어선
   3) 주황색 : 외부에서 공급되는 연동장치 제어회로
   4) 녹색 또는 녹색과 노랑 혼용 : 접지선
   5) 청색 : 직류제어회로
2. CABLE MATERIAL : KIV OR EQUIVALENT
   MIN SIZE : 2.5sq
3. 제어용 전선 : 2.5mm KIV,HIV
4. 제작시 다소 변경 될수있음.
5. 외함 개방구조는 다음과 같을것.
   1) 외함 개방시 충전부분이 차단되도록 할것.
   2) 외함 개방후 충전되어있는 부분은 IP2X 이상의 직접 접촉 방호가 되어있을것.

MK	DATE	REVISIONS	CHK.	APP.
4				
3				
2				
1				

CUSTOMER	
DRAWING TITLE	CREEP HOIST CONTROL BOX ARRANGEMENT DRAWING

DRAWING	DESIGN	CHECKED	APPROVED	SCALE	DATE	ORDER NO.
				NONE		

극동호이스트 주식회사
KUK DONG HOIST CO., LTD.

DWG. NO KDC03BA41

불법복제 및 배포금지

1	2	3	4	5	6	7	8	9	10	11	12	13	14	15	16	17	18	19	20.

ADR'S NO.

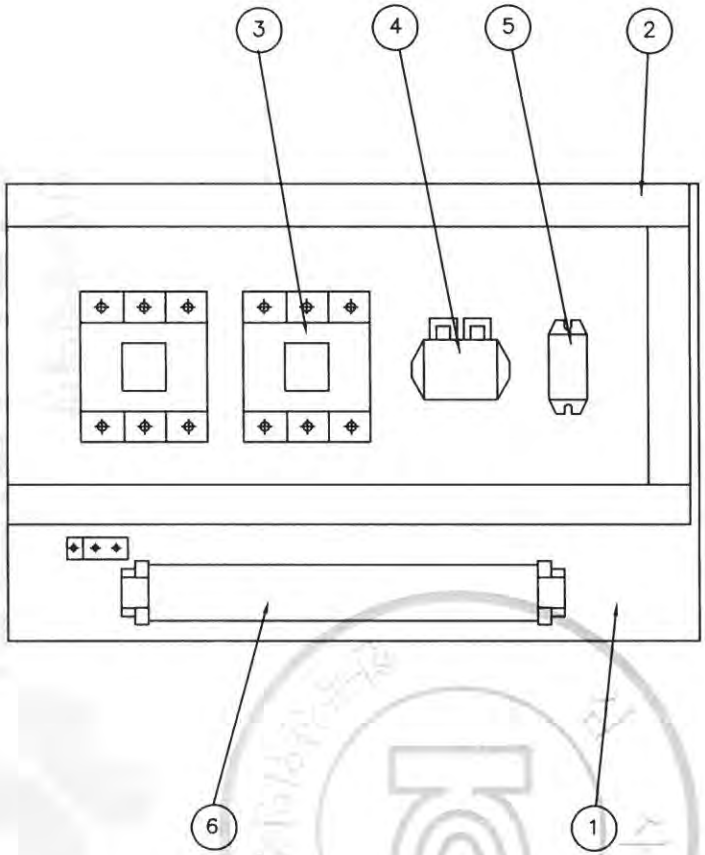

NO	DESCRIPTION	SPEC	Q'TY	REMARK
1	CHASSIS PLATE	–	1	아 연 도 금
2	CABLE DUCT	–	1	
3	MAGNET CONTACT	DMC22C	2	TRAVERSING
4	E.O.C.R	SS–05	1	TRAVERSING
5	SILICON RECTIFIER	SR–30	1	TRAVERSING
6	TERMINAL BLOCK	25A , 15A	1	TRAVERSING

NOTE
1. 전선의 색상은 다음과 같다.
   1) 흑색 : 교류및 직류전원선 5) 청색 : 직류제어회로
   2) 적색 : 교류제어선
   3) 주황색 : 외부에서 공급되는 연동장치 제어회로
   4) 녹색 또는 녹색과 노랑 혼용 : 접지선
2. CABLE MATERIAL : KIV OR EQUIVALENT
   MIN SIZE : 2.5sq
3. 제어용 전선 : 2.5mm KIV,HIV
4. 제작시 다소 변경 될수있음.
5. 외함 개방구조는 다음과 같을것.
   1) 외함 개방시 충전부분이 차단되도록 할것.
   2) 외함 개방후 충전되어있는 부분은 IP2X 이상의 직접 접촉 방호가 되어있을것.

불법복제 및 배포금지

MK	DATE	REVISIONS	CHK.	APP.
4				
3				
2				
1				

CUSTOMER		DRAWING	DESIGN	CHECKED	APPROVED	SCALE	DATE	ORDER NO.
DRAWING TITLE	TRAVERSING POWER CONTROL BOX					NONE		
	ARRANGEMENT DRAWING					DWG. NO	KDC03bt42	

1	2	3	4	5	6	7	8	9	10	11	12	13	14	15	16	17	18	19	20
POWER CIRCUIT																			ADR'S NO.
HOISTING MOTION										CREEP HOIST MOTION									B1

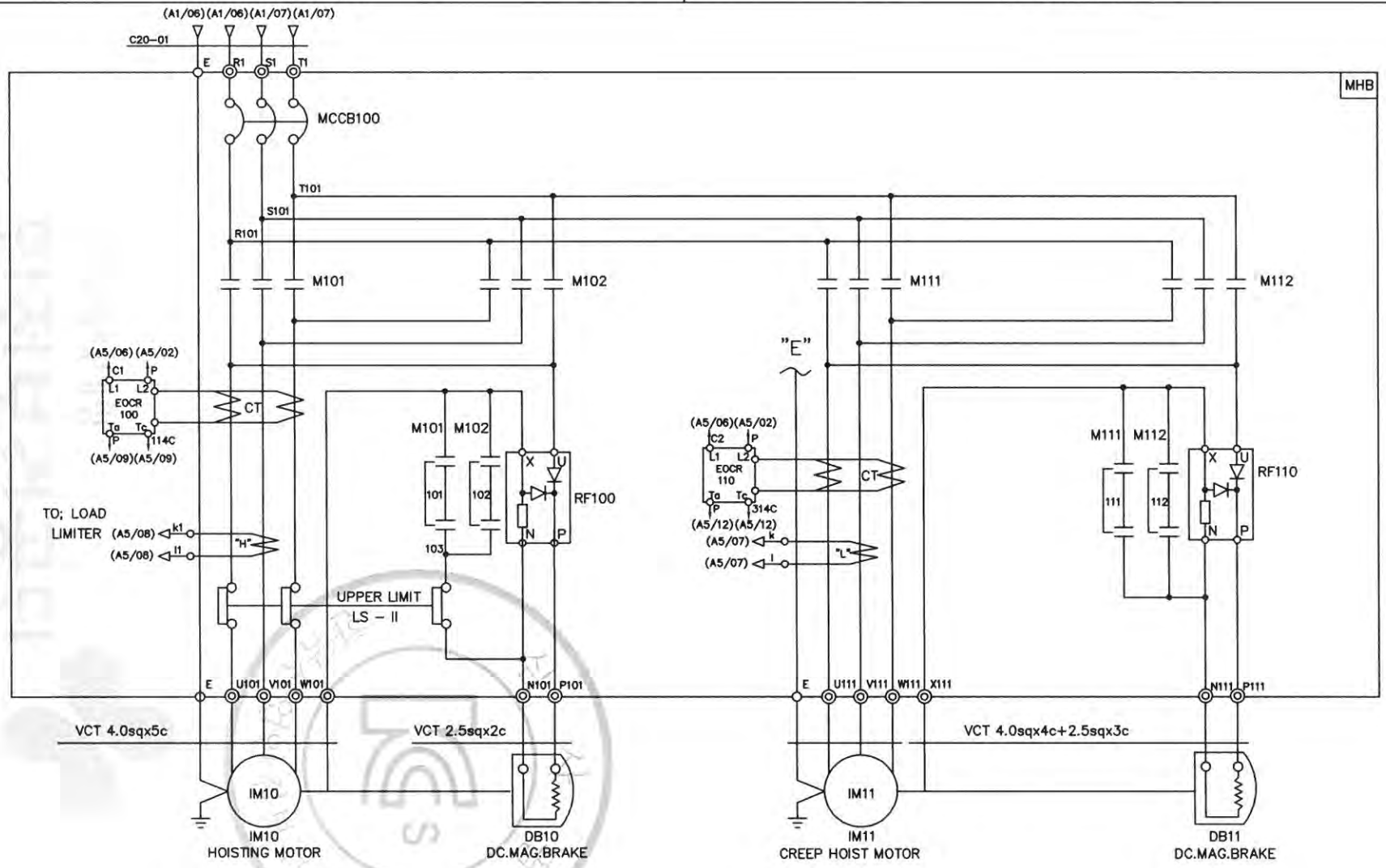

SPECIFICATION / SYMBOLS / DESCRIPTION	HOISTING POWER	HOISTING MOTOR	CREEP MOTOR	DC.MAG' BRAKE	NO FUSE BREAKER	TRANSFORMER	FUSE		MAGNET CONTACTOR		UPPER LIMIT	ELECTRIC OVER CURRENT RELAY		SILICON RECTIFIER		LOAD LIMITER	CABLE
	HOIST	IM 10	IM 11	DB10, 11	MCCB100	TR 1	F11,F12	F13	M101,M102	M111,M112	LS-I, LS-II	EOCR100	EOCR110	RF100	RF110	LOAD LIMITER	C20-01
	3TON AC 3PH 440V 60Hz	5.5KWx4P	1.1KWx4P	DC 100V	ABE-33AF/20A	440/110V,120V,100VA	1A	3A	DMC40C	DMC22C	AC 600V 75A	SS-30	SS-05	SR-60	SR-30	JDL-100	VFCT 6.0sqx4c
SELECTION / MAKER	KUKDONG				LS	SHINHAN	-		DONG-A		KUKDONG	ASAN				JEUNGHO	DONGIL

MK	DATE	REVISIONS	CHK.	APP.
4				
3				
2				
1				

CUSTOMER		DRAWING	DESIGN	CHECKED	APPROVED	SCALE	DATE	ORDER NO.
DRAWING TITLE	CREEP HOISTING POWER CONTROL CIRCUIT DIAGRAM					NONE		
		극동호이스트 주식회사 KUK DONG HOIST CO., LTD.				DWG. NO	KDC3E42	

무단배포 및 복제금지

1	2	3	4	5	6	7	8	9	10	11	12	13	14	15	16	17	18	19	20
POWER CIRCUIT																			ADR'S NO.
TRAVERSING MOTION																			C1

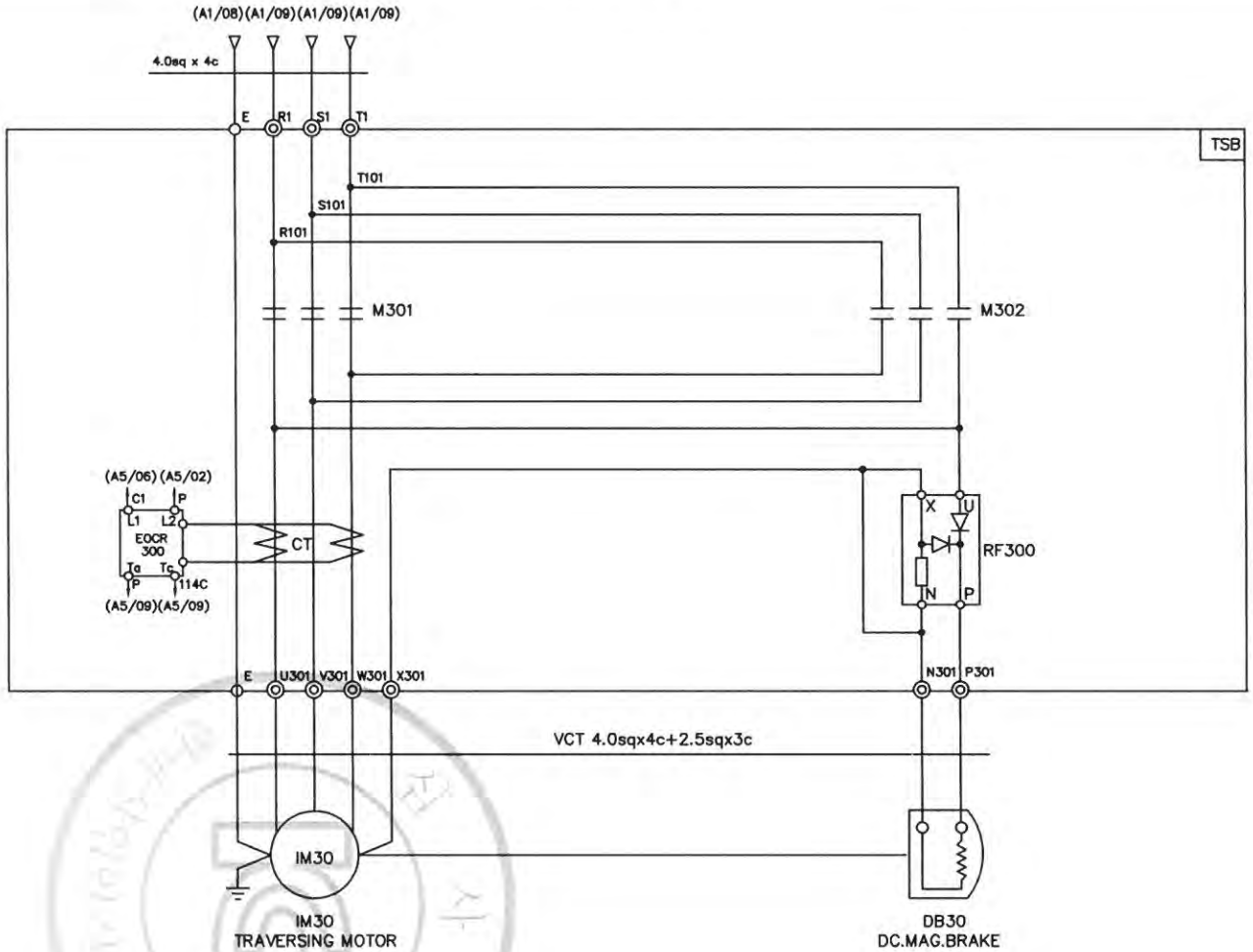

SPECIFICATION / SYMBOLS / DESCRIPTION		TRAVERSING MOTOR	DC MAG' BRAKE	MAGNET CONTACTOR	SILICON RECTIFIER	ELECTRIC OVER CURRENT RELAY	LIMIT SWTCH
		IM 30	DB 30	M301 , M302	RF 300	EOCR 300	LS-301 , LS-302
	440V	0.75KW x 4P AC 3PH 440V 60Hz	DC 100V	DMC22C	SR-30	SS-05	HY - W904
		0.5KW x 6P AC 3PH 440V 60Hz	DC 100V	DMC22C	SR-30	SS-05	HY - W904
SELECTION MAKER		KUKDONG		DONN-A	ASAN		

MK	DATE	REVISIONS	CHK.	APP.
4				
3				
2				
1				

CUSTOMER		DRAWING	DESIGN	CHECKED	APPROVED	SCALE	DATE	ORDER NO.
DRAWING TITLE	TRAVERSING POWER CONTROL CIRCUIT DIAGRAM					NONE		
		KD 극동호이스트 주식회사 KUK DONG HOIST CO., LTD.				DWG. NO	KDC3E43	

불법복제 및 배포금지

1	2	3	4	5	6	7	8	9	10	11	12	13	14	15	16	17	18	19	20
POWER CIRCUIT																			ADR'S NO.
TRAVERSING MOTION																			C2

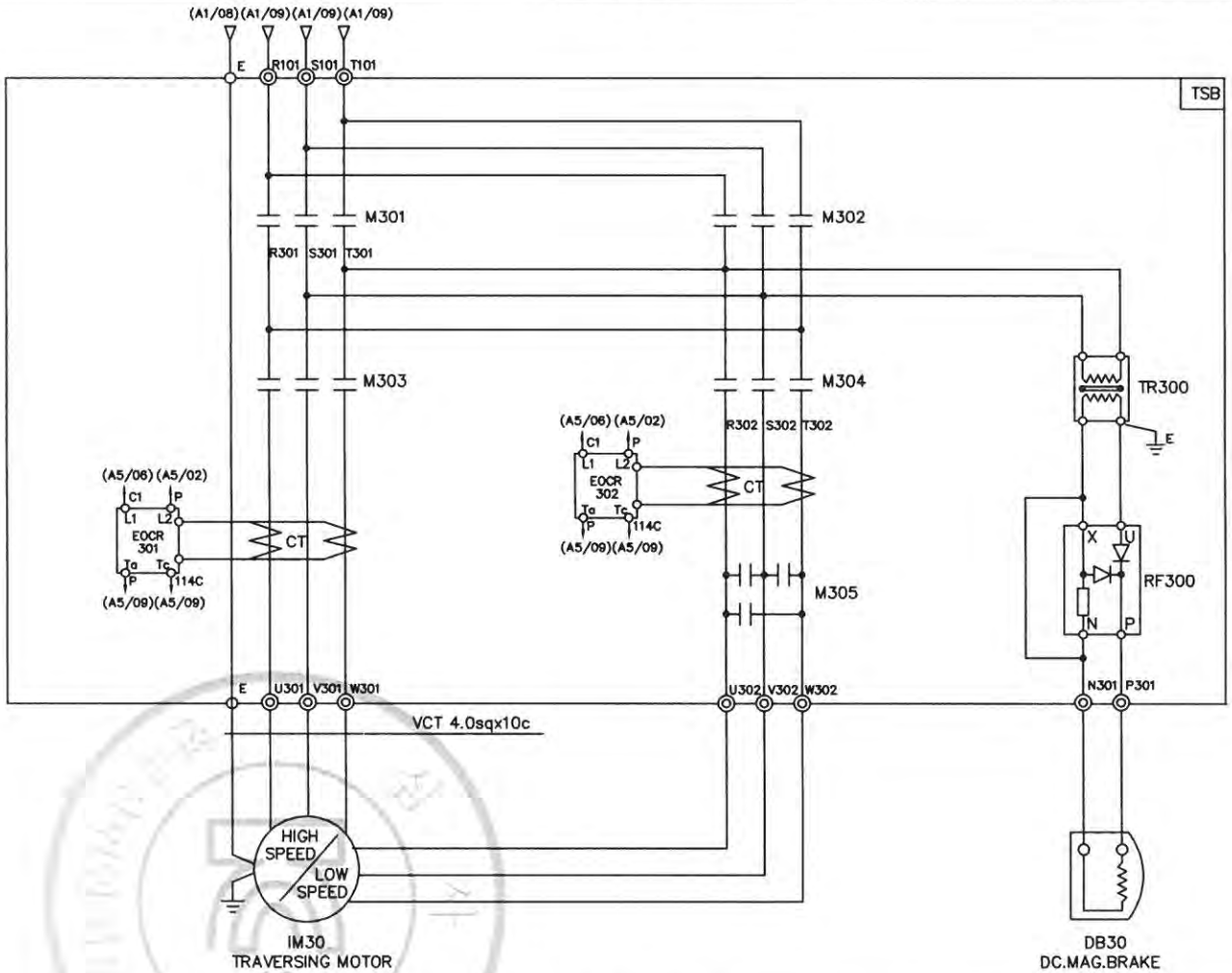

SPECIFICATION / SYMBOLS		TRAVERSING MOTOR	DC MAG' BRAKE	MAGNET CONTACTOR		SILICON RECTIFIER	ELECTRIC OVER CURRENT RELAY	TRANSFORMER
DESCRIPTION		IM 30	DB30	M301 , M302 , M303	M304 , M305	RF 300	EOCR 301,302	TR300
	440V	0.5/025KWx6/12P AC3PH 440V 60Hz	DC 100V	DMC22C	DMC22C	SR-30	SS-05	AC440/220V, 300VA
	440V	0.8/0.4KWx4/8P AC3PH 440V 60Hz	DC 100V	DMC22C	DMC22C	SR-30	SS-05	AC440/220V, 300VA
SELECTION / MAKER		KUKDONG		DONG-A		ASAN		SHINHAN

MK	DATE	REVISIONS	CHK.	APP.
4				
3				
2				
1				

CUSTOMER		DRAWING	DESIGN	CHECKED	APPROVED	SCALE	DATE	ORDER NO.
DRAWING TITLE	TRAVERSING POWER CONTROL CIRCUIT DIAGRAM					NONE		
		KD 극동호이스트 주식회사 KUK DONG HOIST CO., LTD.				DWG. NO	KDC3E45	

불법복제 및 배포금지

1	2	3	4	5	6	7	8	9	10	11	12	13	14	15	16	17	18	19	20.

ADR'S NO.

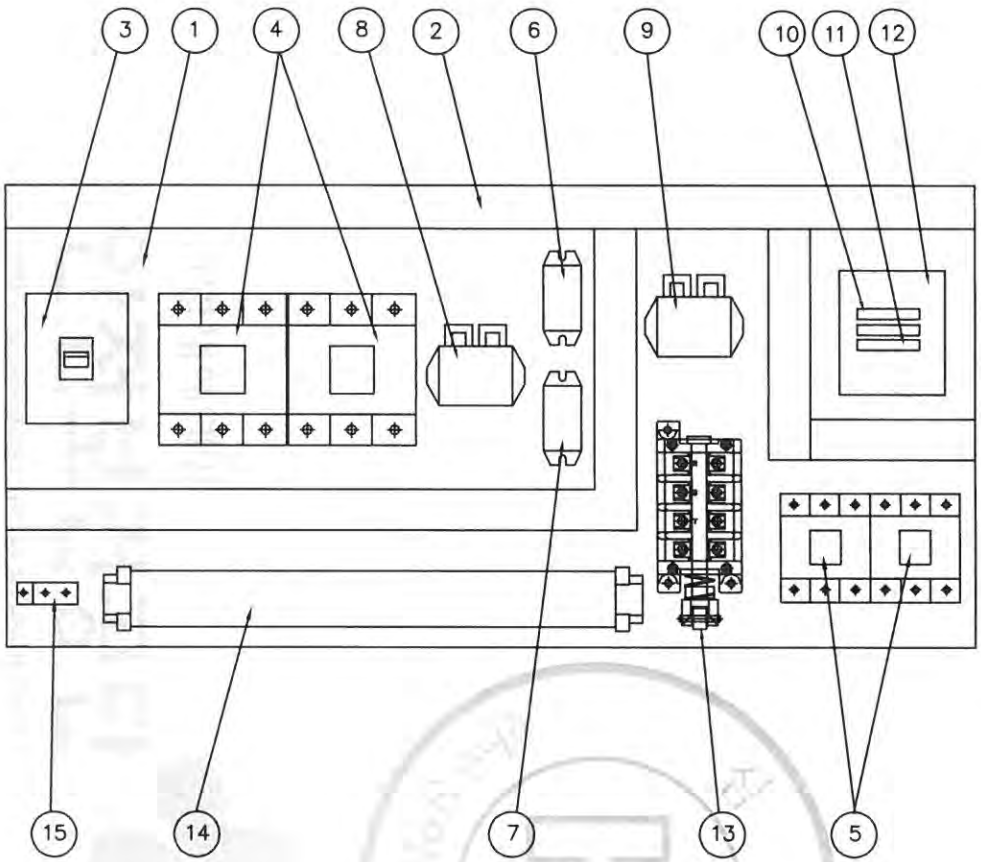

NO	DESCRIPTION	SPECIFICATION	Q'TY	REMARK
1	CHASSIS PLATE		1	아 연 도 금
2	CABLE DUCT	–	1	
3	MCCB100	33AF/20AT	1	HOISTING
4	MAGNET CONTACT	DMC40C	2	HOISTING
5	MAGNET CONTACT	DMC22C	2	CREEP HOIST
6	SILICON RECTIFIER	SR-60	1	HOISTING
7	SILICON RECTIFIER	SR-30	1	CREEP HOIST
8	E.O.C.R	SS-30	1	HOISTING
9	E.O.C.R	SS-05	1	CREEP HOIST
10	FUSE F11,F12	1 A	2	
11	FUSE F13	3 A	1	
12	TRANSFORMER	440V,460V/110V,120V 100VA	1	
13	UPPER LIMITER	AC 600V, 75A	1	LS-1,2
14	TERMINAL BLOCK	60A,15A		
15	EARTH TERMINAL	3tx20x50	1	

NOTE

1. UPPER LIMIT LS-1,LS-2의 접점 허용 전류 용량. : AC 600V, 75A
2. POWER SOURCE : AC. 3ø 460V 60HZ
3. M1 * OWNER SCOPE (CRANE 용 HOIST 제작시)
   * MAKER SCOPE (MONORAIL 용 HOIST 제작시)

NOTE

1. 전선의 색상은 다음과 같다.
   1) 흑색 : 교류및 직류전원선
   2) 적색 : 교류제어선
   3) 주황색 : 외부에서 공급되는 연동장치 제어회로
   4) 녹색 또는 녹색과 노랑 혼용 : 접지선
   5) 청색 : 직류제어회로
2. CABLE MATERIAL : KIV OR EQUIVALENT
   MIN SIZE : 2.5sq
3. 제어용 전선 : 2.5mm KIV,HIV
4. 제작시 다소 변경 될수있음.
5. 외함 개방구조는 다음과 같을것.
   1) 외함 개방시 충전부분이 차단되도록 할것.
   2) 외함 개방후 충전되어있는 부분은 IP2X 이상의 직접 접촉 방호가 되어있을것.

MK	DATE	REVISIONS	CHK.	APP.
4				
3				
2				
1				

CUSTOMER		DRAWING	DESIGN	CHECKED	APPROVED	SCALE	DATE	ORDER NO.
DRAWING TITLE	CREEP HOIST CONTROL BOX					NONE		
	ARRANGEMENT DRAWING	KD 극동호이스트 주식회사 KUK DONG HOIST CO., LTD.				DWG. NO	KDC03BA51	

불법복제 및 배포금지

1	2	3	4	5	6	7	8	9	10	11	12	13	14	15	16	17	18	19	20.

ADR'S NO.

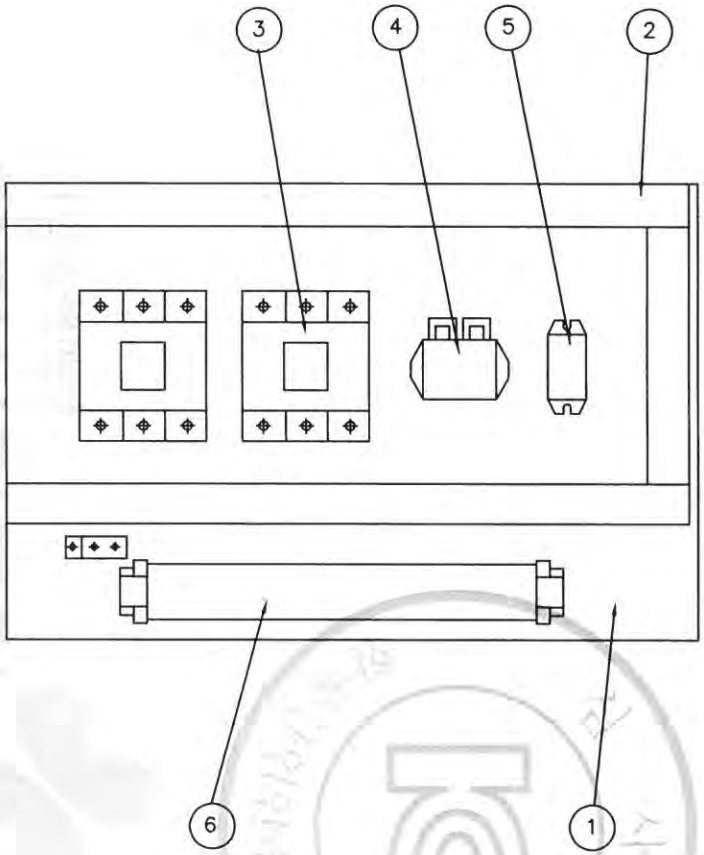

NO	DESCRIPTION	SPEC	Q'TY	REMARK
1	CHASSIS PLATE	–	1	아 연 도 금
2	CABLE DUCT	–	1	
3	MAGNET CONTACT	DMC22C	2	TRAVERSING
4	E.O.C.R	SS–05	1	TRAVERSING
5	SILICON RECTIFIER	SR–30	1	TRAVERSING
6	TERMINAL BLOCK	25A , 15A	1	TRAVERSING

NOTE
1. 전선의 색상은 다음과 같다.
   1) 흑색 : 교류및 직류전원선
   2) 적색 : 교류제어선
   3) 주황색 : 외부에서 공급되는 연동장치 제어회로
   4) 녹색 또는 녹색과 노랑 혼용 : 접지선
   5) 청색 : 직류제어회로
2. CABLE MATERIAL : KIV OR EQUIVALENT, MIN SIZE : 2.5sq
3. 제어용 전선 : 2.5mm KIV,HIV
4. 제작시 다소 변경 될수있음.
5. 외함 개방구조는 다음과 같을것.
   1) 외함 개방시 충전부분이 차단되도록 할것.
   2) 외함 개방후 충전되어있는 부분은 IP2X 이상의 직접 접촉 방호가 되어있을것.

무단복제 및 배포금지

MK	DATE	REVISIONS	CHK.	APP.
4				
3				
2				
1				

CUSTOMER		DRAWING	DESIGN	CHECKED	APPROVED	SCALE	DATE	ORDER NO.
DRAWING TITLE	TRAVERSING POWER CONTROL BOX					NONE		
	ARRANGEMENT DRAWING					DWG. NO	KDC03bt52	

1	2	3	4	5	6	7	8	9	10	11	12	13	14	15	16	17	18	19	20
POWER CIRCUIT																			ADR'S NO.
HOISTING MOTION										CREEP HOIST MOTION									B1

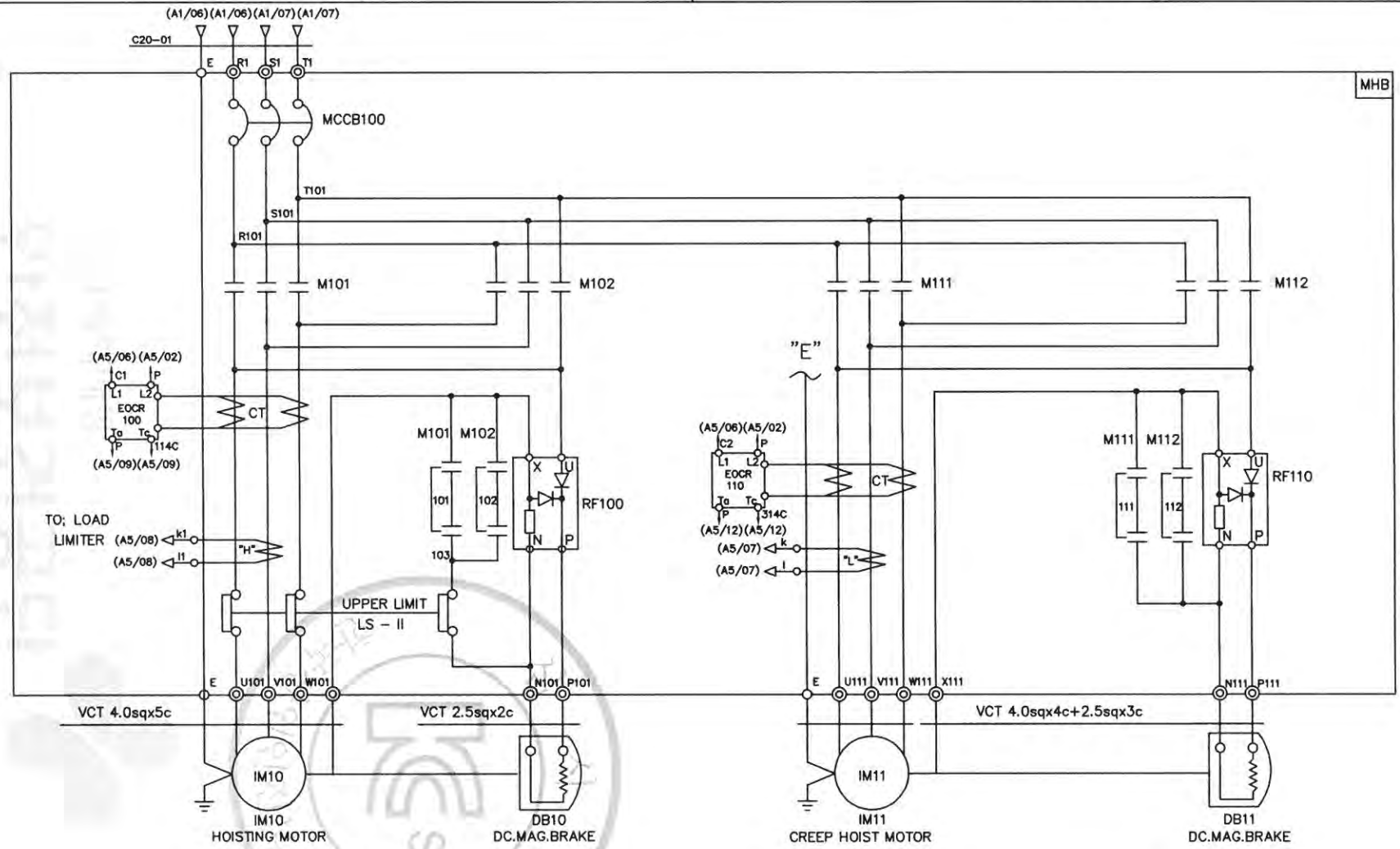

SPECIFICATION / SYMBOLS	HOISTING POWER	HOISTING MOTOR	CREEP MOTOR	DC.MAG' BRAKE	NO FUSE BREAKER	TRANSFORMER	FUSE		MAGNET CONTACTOR		UPPER LIMIT	ELECTRIC OVER CURRENT RELAY		SILICON RECTIFIER		LOAD LIMITER	CABLE
DESCRIPTION	HOIST	IM 10	IM 11	DB10, 11	MCCB100	TR 1	F11,F12	F13	M101,M102	M111,M112	LS-I, LS-II	EOCR100	EOCR110	RF100	RF110	LOAD LIMITER	C20-01
	3TON AC 3PH 460V 60Hz	5.5KWx4P	1.1KWx4P	DC 100V	ABE-33AF/20A	460/110V,120V,100VA	1A	3A	DMC40C	DMC22C	AC 600V 75A	SS-30	SS-05	SR-60	SR-30	JDL-100	VFCT 6sqx4c
SELECTION / MAKER	KUKDONG				LS	SHINHAN	-		DONG-A		KUKDONG	ASAN				JUNGHO	DONGIL

MK	DATE	REVISIONS	CHK.	APP.
4				
3				
2				
1				

CUSTOMER		DRAWING	DESIGN	CHECKED	APPROVED	SCALE	DATE	ORDER NO.
DRAWING TITLE	CREEP HOISTING POWER CONTROL CIRCUIT DIAGRAM					NONE		
		극동호이스트 주식회사 KUK DONG HOIST CO., LTD.				DWG. NO	KDC3E52	

무단배포 및 복제금지

1	2	3	4	5	6	7	8	9	10	11	12	13	14	15	16	17	18	19	20
POWER CIRCUIT																			ADR'S NO.
TRAVERSING MOTION																			C1

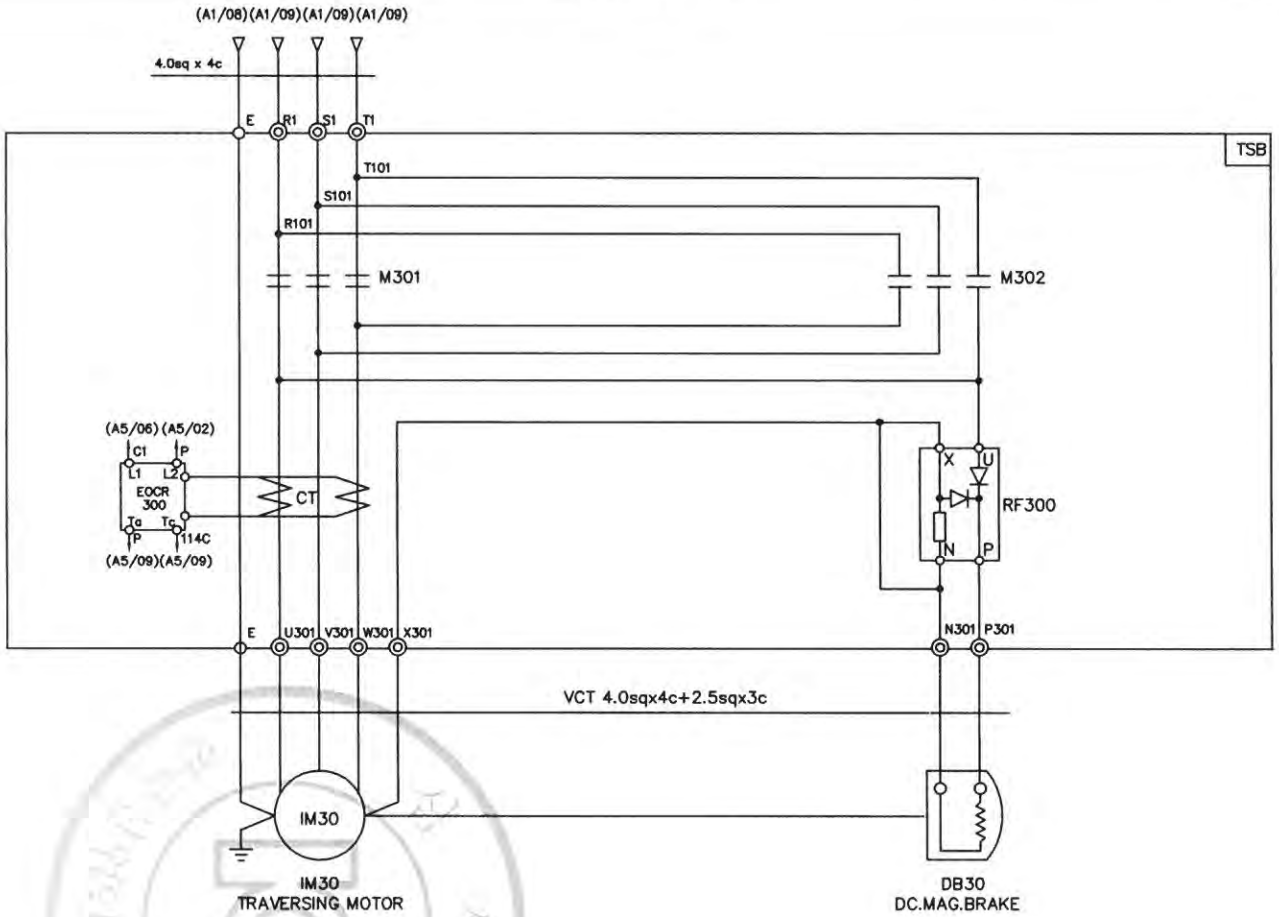

SPECIFICATION / SYMBOLS / DESCRIPTION		TRAVERSING MOTOR	DC MAG' BRAKE	MAGNET CONTACTOR	SILICON RECTIFIER	ELECTRIC OVER CURRENT RELAY	LIMIT SWTCH
		IM 30	DB 30	M301 , M302	RF 300	EOCR 300	LS-301 , LS-302
	460V	0.75KW x 4P AC 3PH 460V 60Hz	DC 100V	DMC22C	SR-30	SS-05	HY - W904
		0.5KW x 6P AC 3PH 460V 60Hz	DC 100V	DMC22C	SR-30	SS-05	HY - W904
SELECTION / MAKER		KUKDONG		DONG-A	ASECO		

MK	DATE	REVISIONS	CHK.	APP.
4				
3				
2				
1				

CUSTOMER		DRAWING	DESIGN	CHECKED	APPROVED	SCALE	DATE	ORDER NO.
DRAWING TITLE	TRAVERSING POWER CONTROL CIRCUIT DIAGRAM					NONE		
		KD 극동호이스트 주식회사 KUK DONG HOIST CO., LTD.				DWG. NO	KDC3E53	

불법복제 및 배포금지

1	2	3	4	5	6	7	8	9	10	11	12	13	14	15	16	17	18	19	20

POWER CIRCUIT

TRAVERSING MOTION

ADR'S NO. C2

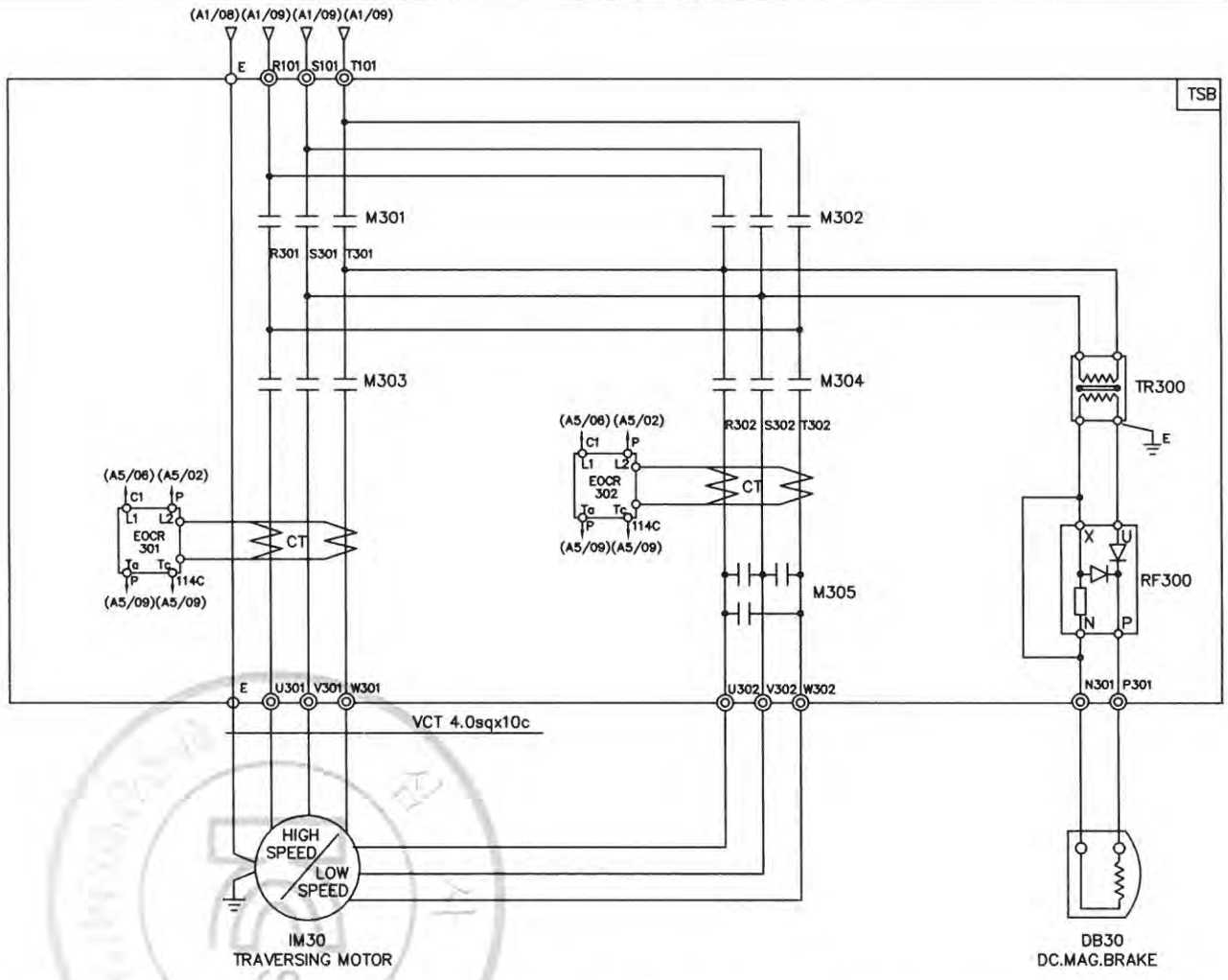

SPECIFICATION / SYMBOLS / DESCRIPTION		TRAVERSING MOTOR	DC MAG' BRAKE	MAGNET CONTACTOR		SILICON RECTIFIER	ELECTRIC OVER CURRENT RELAY	TRANSFORMER
		IM 30	DB30	M301 , M302 , M303	M304 , M305	RF 300	EOCR 301,302	TR300
	460V	0.5/025KWx6/12P AC3PH 460V 60Hz	DC 100V	DMC22C	DMC22C	SR-30	SS-05	AC460/220V, 300VA
	460V	0.8/0.4KWx4/8P AC3PH 460V 60Hz	DC 100V	DMC22C	DMC22C	SR-30	SS-05	AC460/220V, 300VA
SELECTION MAKER		KUKDONG		DONG-A		ASECO		SHINHAN

MK	DATE	REVISIONS	CHK.	APP.
4				
3				
2				
1				

CUSTOMER		DRAWING	DESIGN	CHECKED	APPROVED	SCALE	DATE	ORDER NO.
DRAWING TITLE	TRAVERSING POWER CONTROL CIRCUIT DIAGRAM					NONE		
		극동호이스트 주식회사 KUK DONG HOIST CO., LTD.				DWG. NO	KDC3E55	

무단배포 및 제작불가

1	2	3	4	5	6	7	8	9	10	11	12	13	14	15	16	17	18	19	20.

ADR'S NO.

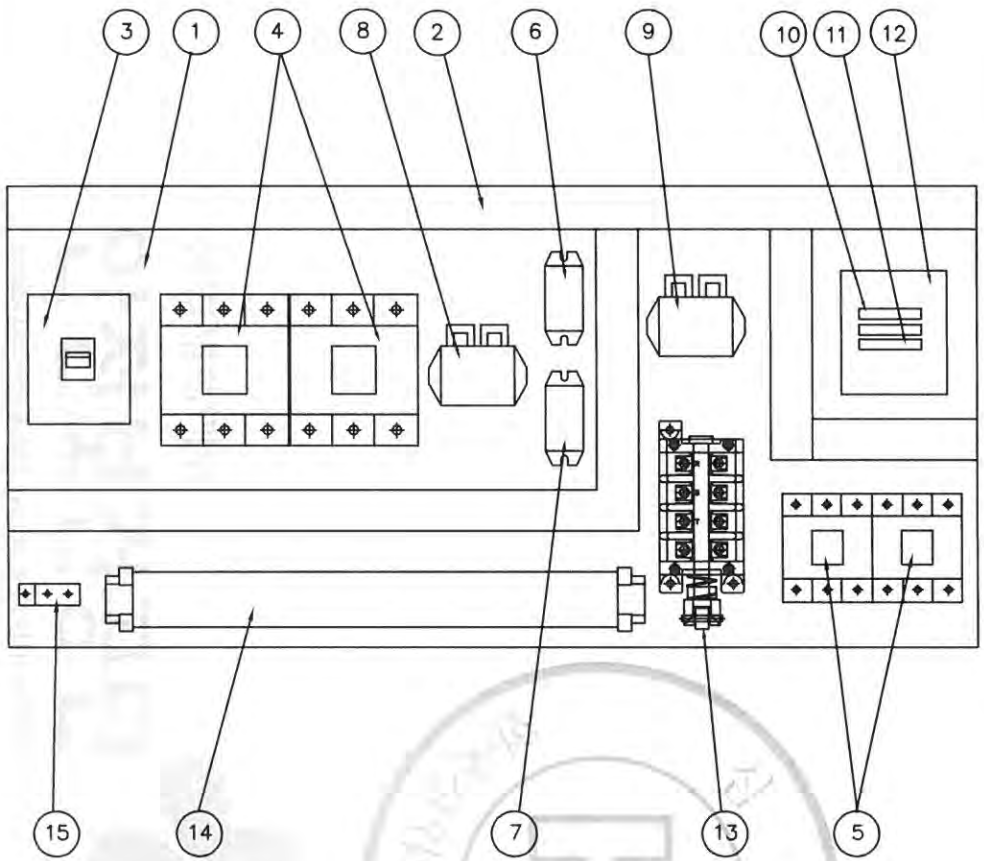

NO	DESCRIPTION	SPECIFICATION	Q'TY	REMARK
1	CHASSIS PLATE		1	아 연 도 금
2	CABLE DUCT	–	1	
3	MCCB100	33AF/20AT	1	HOISTING
4	MAGNET CONTACT	DMC40C	2	HOISTING
5	MAGNET CONTACT	DMC22C	2	CREEP HOIST
6	SILICON RECTIFIER	SR-60	1	HOISTING
7	SILICON RECTIFIER	SR-30	1	CREEP HOIST
8	E.O.C.R	SS-30	1	HOISTING
9	E.O.C.R	SS-05	1	CREEP HOIST
10	FUSE F11,F12	1 A	2	
11	FUSE F13	3 A	1	
12	TRANSFORMER	480V/110V,120V 100VA	1	
13	UPPER LIMITER	AC 600V, 75A	1	LS-1,2
14	TERMINAL BLOCK	60A,15A		
15	EARTH TERMINAL	3tx20x50	1	

NOTE

1. UPPER LIMIT LS-1,LS-2의 접점 허용 전류 용량. : AC 600V, 75A
2. POWER SOURCE : AC. 3ø 480V 60HZ

NOTE

1. 전선의 색상은 다음과 같다.
   1) 흑색 : 교류및 직류전원선 5) 청색 : 직류제어회로
   2) 적색 : 교류제어선
   3) 주황색 : 외부에서 공급되는 연동장치 제어회로
   4) 녹색 또는 녹색과 노랑 혼용 : 접지선
2. CABLE MATERIAL : KIV OR EQUIVALENT / MIN SIZE : 2.5sq
3. 제어용 전선 : 2.5mm KIV,HIV
4. 제작시 다소 변경 될수있음.
5. 외함 개방구조는 다음과 같을것.
   1) 외함 개방시 충전부분이 차단되도록 할것.
   2) 외함 개방후 충전되어있는 부분은 IP2X 이상의 직접 접촉 방호가 되어있을것.

불법복제 및 배포금지

MK	DATE	REVISIONS	CHK.	APP.
4				
3				
2				
1				

CUSTOMER		DRAWING	DESIGN	CHECKED	APPROVED	SCALE	DATE	ORDER NO.
DRAWING TITLE	CREEP HOIST CONTROL BOX					NONE		
	ARRANGEMENT DRAWING	극동호이스트 주식회사 KUK DONG HOIST CO., LTD.				DWG. NO	KDC03BA68	

1	2	3	4	5	6	7	8	9	10	11	12	13	14	15	16	17	18	19	20.

ADR'S NO.

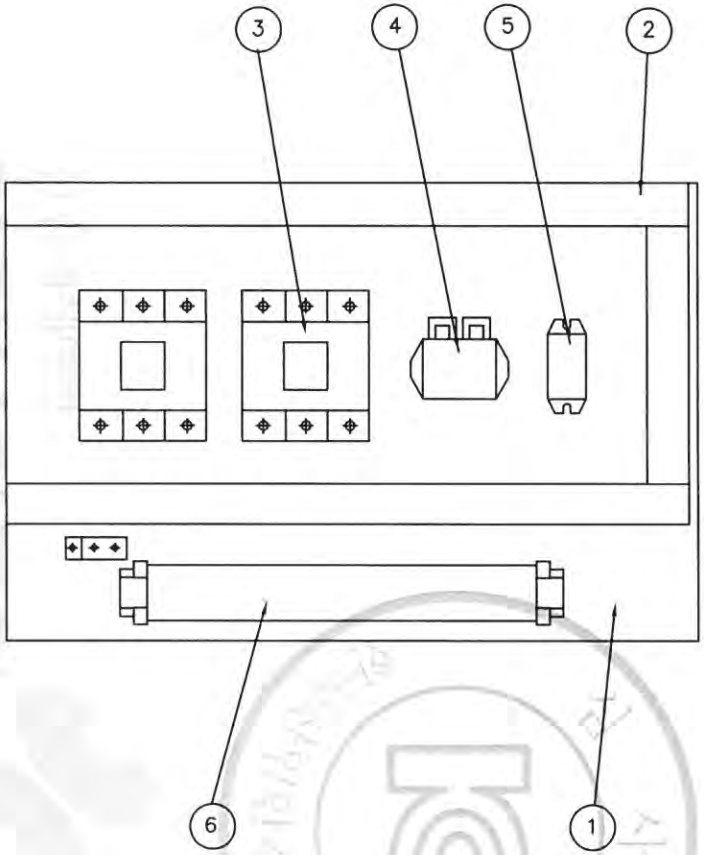

NO	DESCRIPTION	SPEC	Q'TY	REMARK
1	CHASSIS PLATE	–	1	아 연 도 금
2	CABLE DUCT	–	1	
3	MAGNET CONTACT	DMC22C	2	TRAVERSING
4	E.O.C.R	SS–05	1	TRAVERSING
5	SILICON RECTIFIER	SR–30	1	TRAVERSING
6	TERMINAL BLOCK	25A , 15A	1	TRAVERSING

NOTE 1. 전선의 색상은 다음과 같다.
1) 흑색 : 교류및 직류전원선 5) 청색 : 직류제어회로
2) 적색 : 교류제어선
3) 주황색 : 외부에서 공급되는 연동장치 제어회로
4) 녹색 또는 녹색과 노랑 혼용 : 접지선
2. CABLE MATERIAL : KIV OR EQUIVALENT
MIN SIZE : 2.5sq
3. 제어용 전선 : 2.5mm KIV,HIV
4. 제작시 다소 변경 될수있음.
5. 외함 개방구조는 다음과 같을것.
1) 외함 개방시 충전부분이 차단되도록 할것.
2) 외함 개방후 충전되어있는 부분은 IP2X 이상의 직접 접촉 방호가 되어있을것.

무단배포 및 재복제 금지

MK	DATE	REVISIONS	CHK.	APP.
4				
3				
2				
1				

CUSTOMER		DRAWING	DESIGN	CHECKED	APPROVED	SCALE	DATE	ORDER NO.
DRAWING TITLE	TRAVERSING POWER CONTROL BOX					NONE		
	ARRANGEMENT DRAWING					DWG. NO	KDC03bt62	

1	2	3	4	5	6	7	8	9	10	11	12	13	14	15	16	17	18	19	20

POWER CIRCUIT

ADR'S NO. B1

HOISTING MOTION | CREEP HOIST MOTION

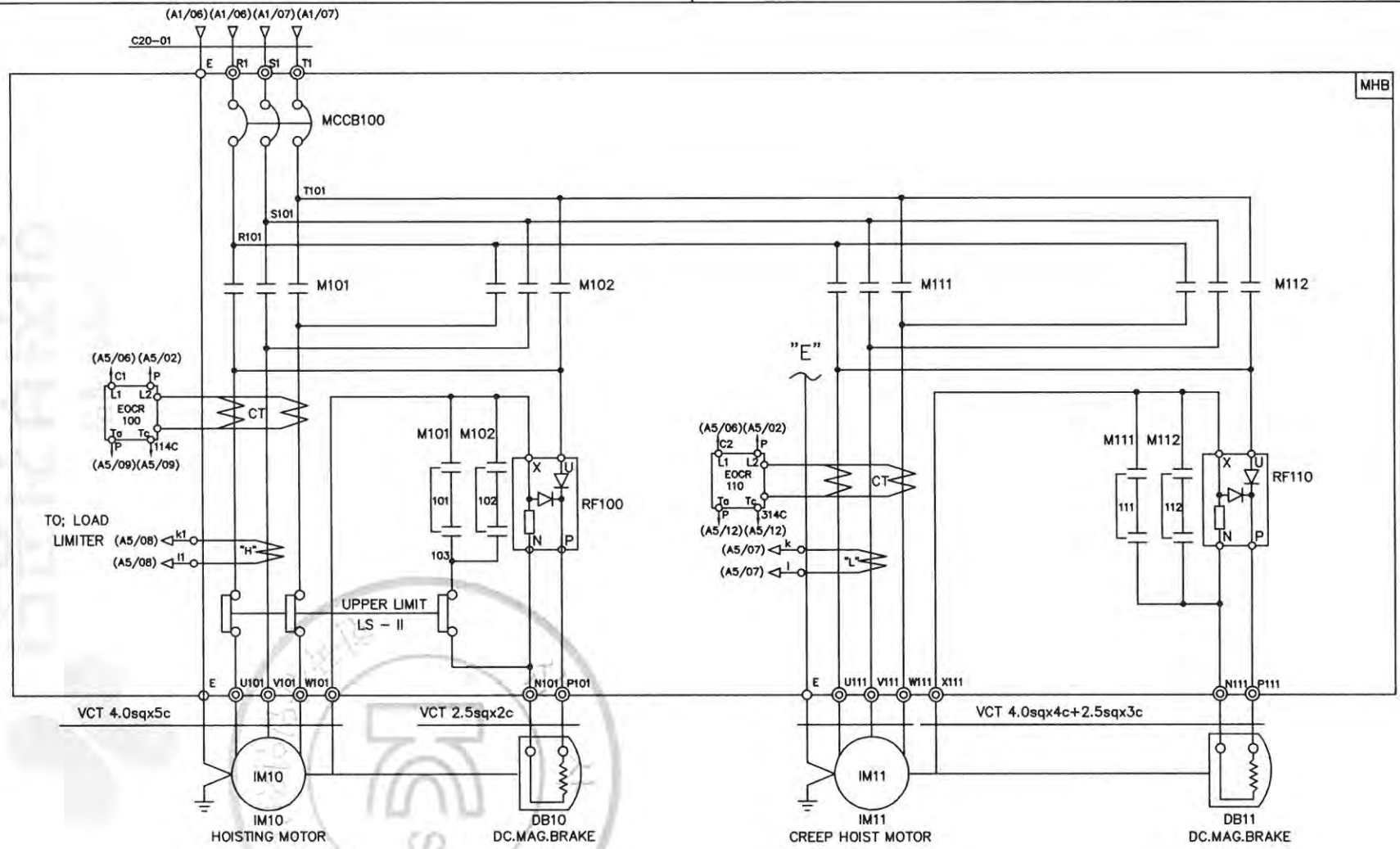

SPECIFICATION / SYMBOLS / DESCRIPTION	HOISTING POWER	HOISTING MOTOR	CREEP MOTOR	DC.MAG' BRAKE	NO FUSE BREAKER	TRANSFORMER	FUSE		MAGNET CONTACTOR		UPPER LIMIT	ELECTRIC OVER CURRENT RELAY		SILICON RECTIFIER		LOAD LIMITER	CABLE
	HOIST	IM 10	IM 11	DB10, 11	MCCB100	TR 1	F11,F12	F13	M101,M102	M111,M112	LS-I, LS-II	EOCR100	EOCR110	RF100	RF110	LOAD LIMITER	C20-01
	2.8TON AC 3PH 480V 60Hz	5.5KWx4P	1.1KWx4P	DC 100V	ABE-33AF/20A	480/110V,120V,100VA	1A	3A	DMC40C	DMC22C	AC 600V 75A	SS-30	SS-05	SR-60	SR-30	JDL-100	VFCT 6.0sqx4c
SELECTION / MAKER	KUKDONG				LS	SHINHAN	-		DONG-A		KUKDONG	ASAN				JUNGHO	DONGIL

MK	DATE	REVISIONS	CHK.	APP.
4				
3				
2				
1				

CUSTOMER

DRAWING TITLE: CREEP HOISTING POWER CONTROL CIRCUIT DIAGRAM

DRAWING	DESIGN	CHECKED	APPROVED	SCALE	DATE	ORDER NO.
				NONE		

극동호이스트 주식회사
KUK DONG HOIST CO., LTD.

DWG. NO KDC3E62

불법복제 및 배포금지

1	2	3	4	5	6	7	8	9	10	11	12	13	14	15	16	17	18	19	20
POWER CIRCUIT																			ADR'S NO.
TRAVERSING MOTION																			C1

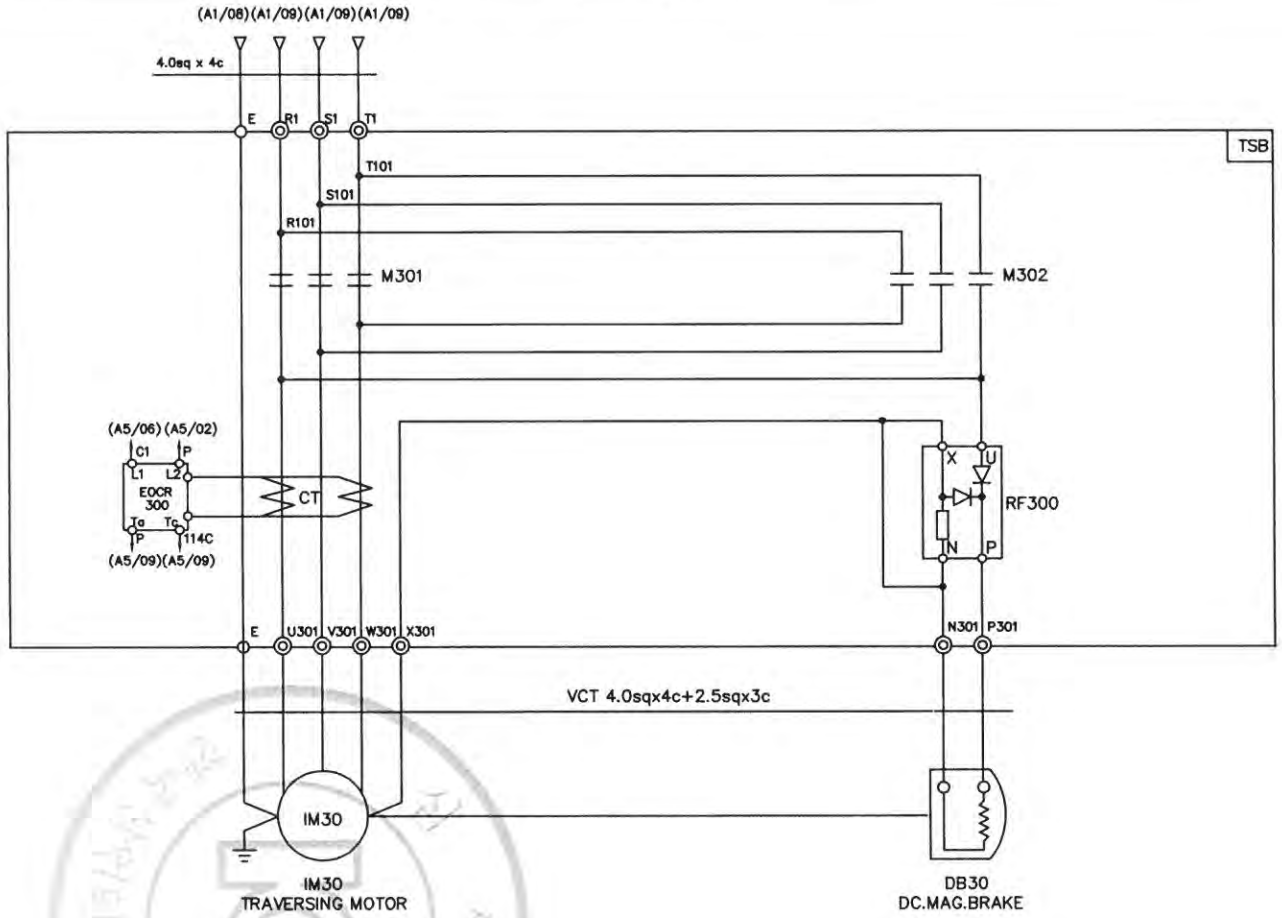

SPECIFICATION / SYMBOLS / DESCRIPTION		IM 30	DC MAG' BRAKE	MAGNET CONTACTOR	SILICON RECTIFIER	ELECTRIC OVER CURRENT RELAY	LIMIT SWTCH
		TRAVERSING MOTOR	DB 30	M301 , M302	RF 300	EOCR 300	LS-301 , LS-302
	480V	0.75KW x 4P AC 3PH 480V 60Hz	DC 100V	DMC22C	SR-30	SS-05	HY - W904
		0.5KW x 6P AC 3PH 480V 60Hz	DC 100V	DMC22C	SR-30	SS-05	HY - W904
SELECTION MAKER		KUKDONG		DONG-A	ASECO		

MK	DATE	REVISIONS	CHK.	APP.
4				
3				
2				
1				

CUSTOMER		DRAWING	DESIGN	CHECKED	APPROVED	SCALE	DATE	ORDER NO.
DRAWING TITLE	TRAVERSING POWER CONTROL CIRCUIT DIAGRAM					NONE		
		극동호이스트 주식회사 KUK DONG HOIST CO., LTD.				DWG. NO	KDC3E63	

무단배포 및 재생금지

1	2	3	4	5	6	7	8	9	10	11	12	13	14	15	16	17	18	19	20
POWER CIRCUIT																			ADR'S NO.
TRAVERSING MOTION																			C2

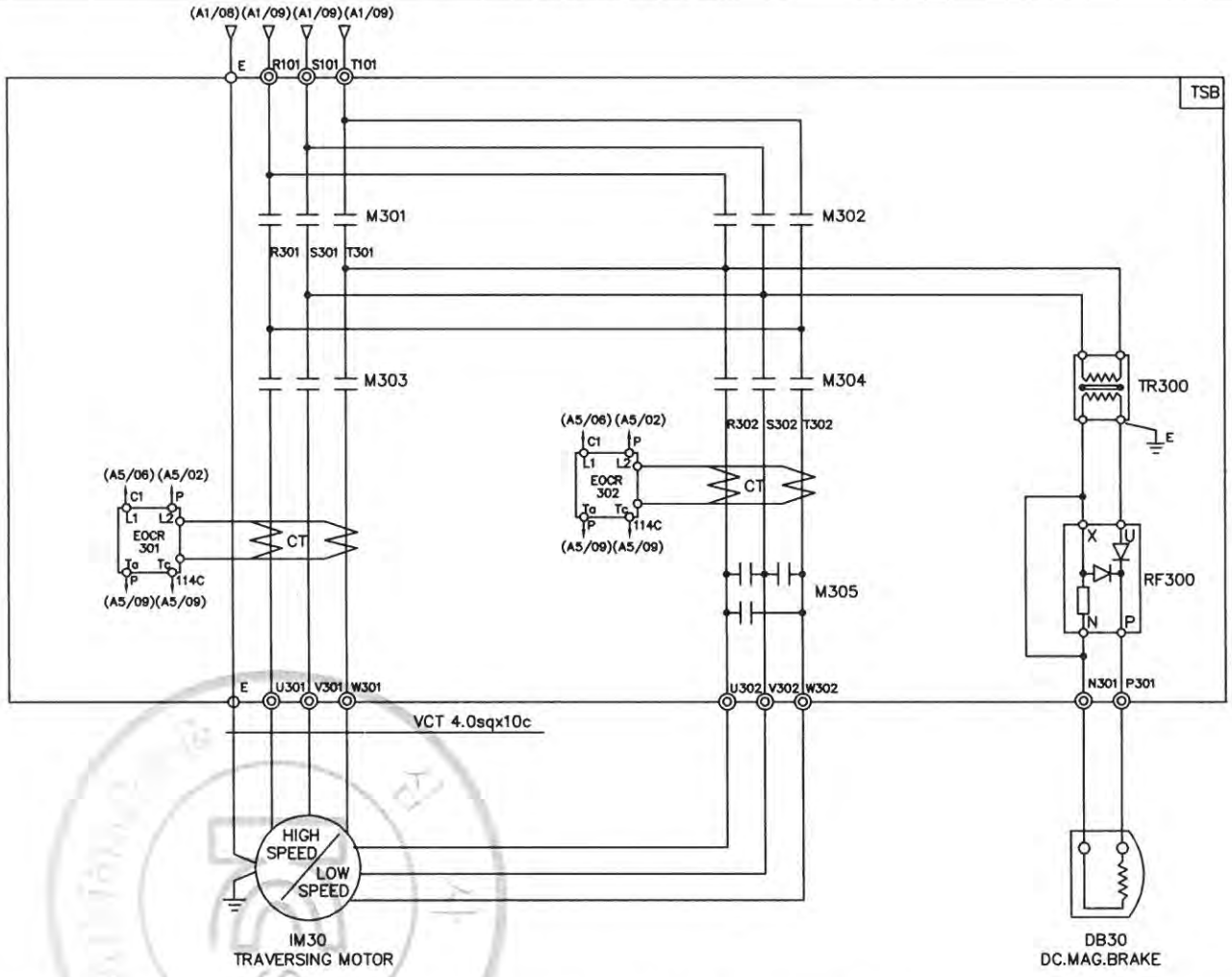

SPECIFICATION / SYMBOLS / DESCRIPTION		TRAVERSING MOTOR	DC MAG' BRAKE	MAGNET CONTACTOR		SILICON RECTIFIER	ELECTRIC OVER CURRENT RELAY	TRANSFORMER
		IM 30	DB30	M301 , M302 , M303	M304 , M305	RF 300	EOCR 301,302	TR300
	480V	0.5/025KWx6/12P AC3PH 480V 60Hz	DC 100V	DMC22C	DMC22C	SR-30	SS-05	AC480/220V, 300VA
	480V	0.8/0.4KWx4/8P AC3PH 480V 60Hz	DC 100V	DMC22C	DMC22C	SR-30	SS-05	AC480/220V, 300VA
SELECTION MAKER		KUKDONG		DONG-A		ASECO		SHINHAN

MK	DATE	REVISIONS	CHK.	APP.
4				
3				
2				
1				

CUSTOMER		DRAWING	DESIGN	CHECKED	APPROVED	SCALE	DATE	ORDER NO.
DRAWING TITLE	TRAVERSING POWER CONTROL CIRCUIT DIAGRAM					NONE		
		극동호이스트 주식회사 KUK DONG HOIST CO., LTD.				DWG. NO	KDC3E65	

무단배포 및 제작불가

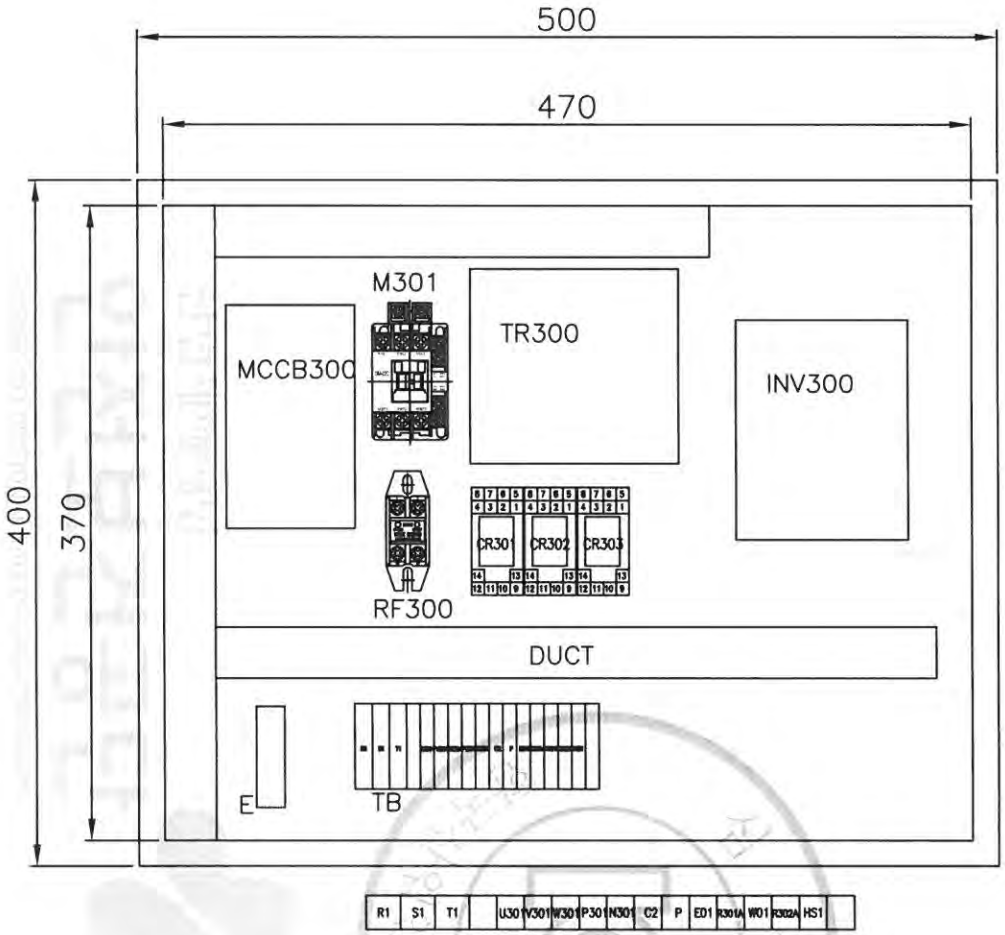

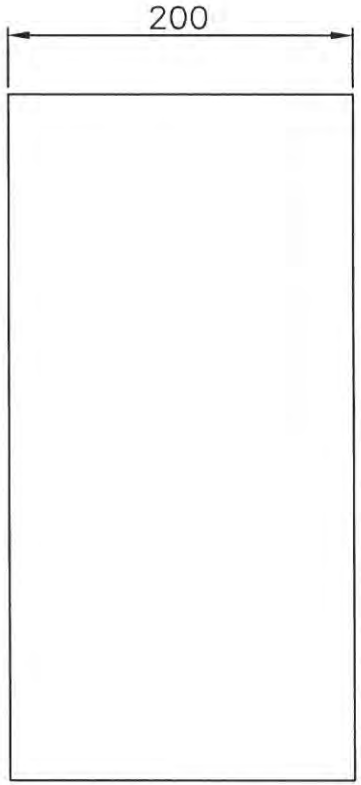

NO.	DESCRIPTION	MT'L	SUB QT'Y	TOTAL QT'Y	SUB WEIGHT(Kg)	TOTAL WEIGHT(Kg)	REMARKS.
2	속 판	SS400		1			
1	T/S BOX	PUR		1			
11	EARTH BUS BAR	PUR		1			
10	DUCT	PUR		1			
9	TERMINAL BLOCK	PUR		1			
8	INVERTER	PUR		1			
7	TR	PUR		1			
6	RELAY & SCOKET	PUR		1			
5	RF	PUR		1			
4	MC	PUR		1			
3	MCCB	PUR		1			

PROJECT				DATE	DIM
					mm
TITLE	T/S CONTROL PANEL(INVERTER)			SCALE	PROJECTION
				A3/3	3rd
DRAWN	DESIGNED	CHECKED	APPROVED	REF. DRAWING	

극동호이스트 주식회사
KUK DONG HOIST CO., LTD.

SHEET No.

DWG No. KD03EI001

지음포배 및 배제 불법복제

1	2	3	4	5	6	7	8	9	10	11	12	13	14	15	16	17	18	19	20
TRAVERSING MOTION																			ADR'S NO.
POWER CIRCUIT DIAGRAM										CONTROL CIRCUIT DIAGRAM									
												BRAKE	EAST		WEST	HIGH SPEED			

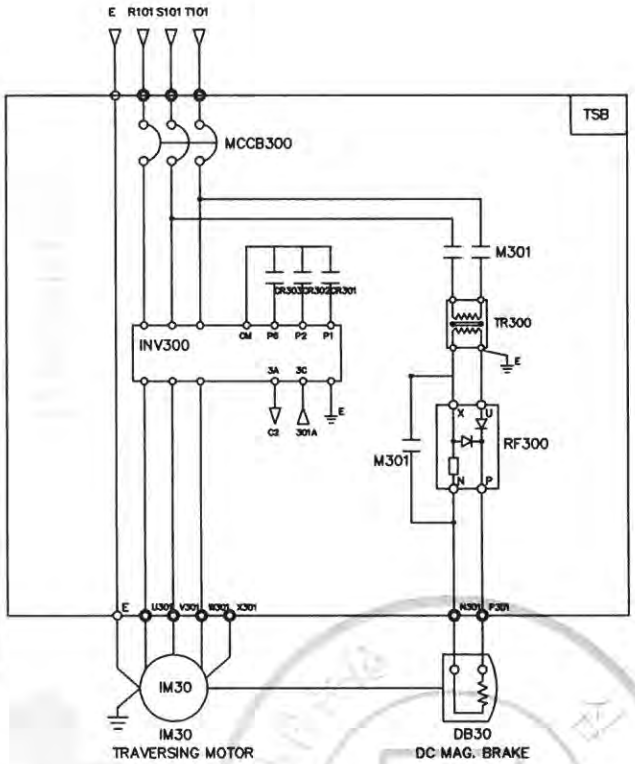

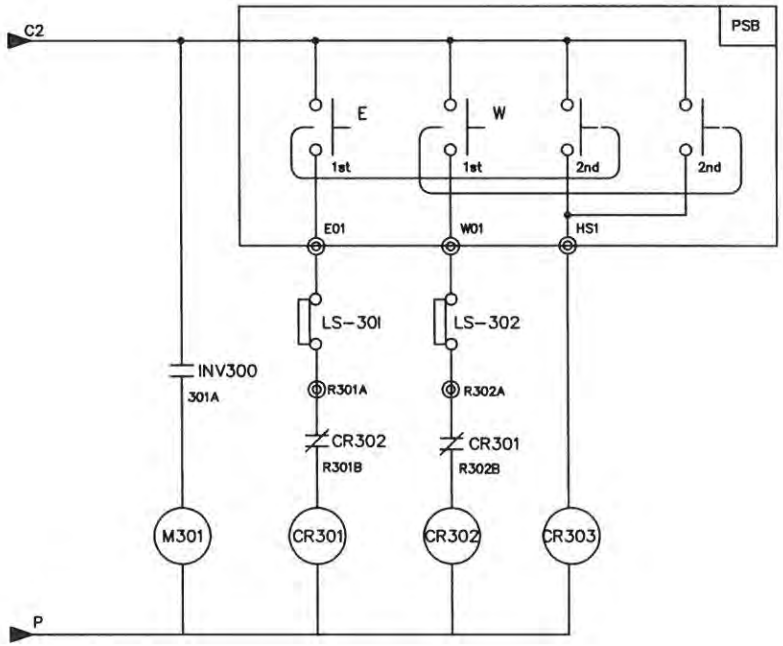

SPECIFICATION / SYMBOLS / DESCRIPTION	TRAVERSING POWER	TRAVERSING MOTOR	DC.MAG' BRAKE	NO FUSE BREAKER	TRANSFORMER	BRAKE MAGNET	CONTROL RELAY	INVERTER	SILICON RECTIFIER
		IM 30	DB30	MCCB300	TR 300	M301	CR301,302,303	INV300	RF300
	AC 3PH 220V 60Hz	0.5KW x 6P	DC 100V	ABE-33AF/10AT	220/220V,200VA	DM-22C	MINI 4a4b(Coil AC110V)	SV015iG5A-2	SR-30
	AC 3PH 380(440,460,480)V 60Hz	0.5KW x 6P	DC 100V	ABE-33AF/10AT	380(440,460,480)/220V,200VA	DM-22C	MINI 4a4b(Coil AC110V)	SV015iG5A-4	SR-30
	AC 3PH 220V 60Hz	0.75KW x 4P	DC 100V	ABE-33AF/10AT	220/220V,200VA	DM-22C	MINI 4a4b(Coil AC110V)	SV008iG5A-2	SR-30
	AC 3PH 380(440,460,480)V 60Hz	0.75KW x 4P	DC 100V	ABE-33AF/10AT	380(440,460,480)/220V,200VA	DM-22C	MINI 4a4b(Coil AC110V)	SV008iG5A-4	SR-30
SELECTION MAKER	KUK DONG HOIST							LS	ASAN

MK	DATE	REVISIONS	CHK.	APP.
4				
3				
2				
1				

CUSTOMER	INVERTER CONTROL	DRAWING	DESIGN	CHECKED	APPROVED	SCALE	DATE	ORDER NO.
DRAWING TITLE	TRAVERSING POWER & CONTROL CIRCUIT DIAGRAM							
		극동호이스트 주식회사 KUK DONG HOIST CO., LTD.				DWG. NO	KD03EI002	

무단배포 및 제작물불가

1	2	3	4	5	6	7	8	9	10	11	12	13	14	15	16	17	18	19	20.
CONTROL CIRCUIT																			ADR'S NO.
EM, STOP					LOAD LIMIT			UPPER LIMIT	CREEP UP		UP	CREEP DOWN		DOWN	EAST	WEST			A5

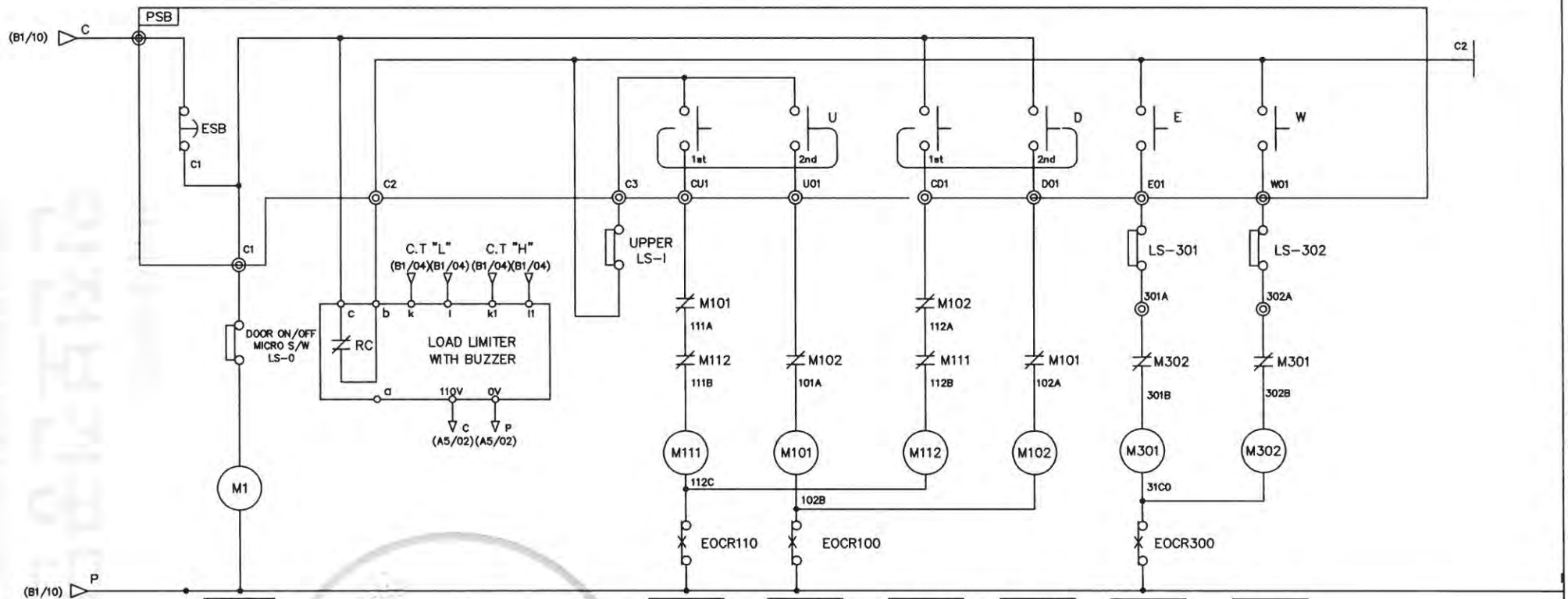

M1	
A	B1/05
A	B1/05
A	B1/05
a	
a	
b	
b	

M111	
A	B1/12
A	B1/12
A	B1/12
a	B1/15
a	B1/15
b	A5/13
b	

M101	
A	B1/05
A	B1/05
A	B1/05
a	B1/07
a	B1/07
b	A5/10
b	A5/14

M112	
A	B1/16
A	B1/16
A	B1/16
a	B1/16
a	B1/16
b	A5/10
b	

M102	
A	B1/08
A	B1/08
A	B1/08
a	B1/08
a	B1/08
b	A5/11
b	A5/13

M301	
A	C1/07
A	C1/07
A	C1/07
a	
a	
b	A5/17
b	

M302	
A	C1/13
A	C1/13
A	C1/13
a	
a	
b	A5/15
b	

SPECIFICATION / SYMBOLS / DESCRIPTION	UPPER LIMIT	PENDANT P.B S/W	LOAD LIMITER	LIMIT SWITCH
	LS-1	E.S.B	LOAD LIMITER	LS-301,302
	AC 600V 75A	250V 3A	JDL-70	HY - W904
	AC 600V 3A	250V 3A	JDL-70	HY - W904
MAKER	KUKDONG	KGAUTO	JEUNGHO	HANYOUNG

MK	DATE	REVISIONS	CHK.	APP.
4				
3				
2				
1				

CUSTOMER		DRAWING	DESIGN	CHECKED	APPROVED	SCALE	DATE	ORDER NO.
DRAWING TITLE	MAIN POWER 2 & CONTROL CIRCUIT DIAGRAM					NONE		
		극동호이스트 주식회사 KUK DONG HOIST CO., LTD.				DWG. NO	KDC3E001	

무단배포 및 복제 금지

1	2	3	4	5	6	7	8	9	10	11	12	13	14	15	16	17	18	19	20.
CONTROL CIRCUIT																			ADR'S NO.
EM, STOP				LOAD LIMIT			UPPER LIMIT	CREEP UP		UP	CREEP DOWN		DOWN	EAST	WEST		SOUTH	NORTH	A5

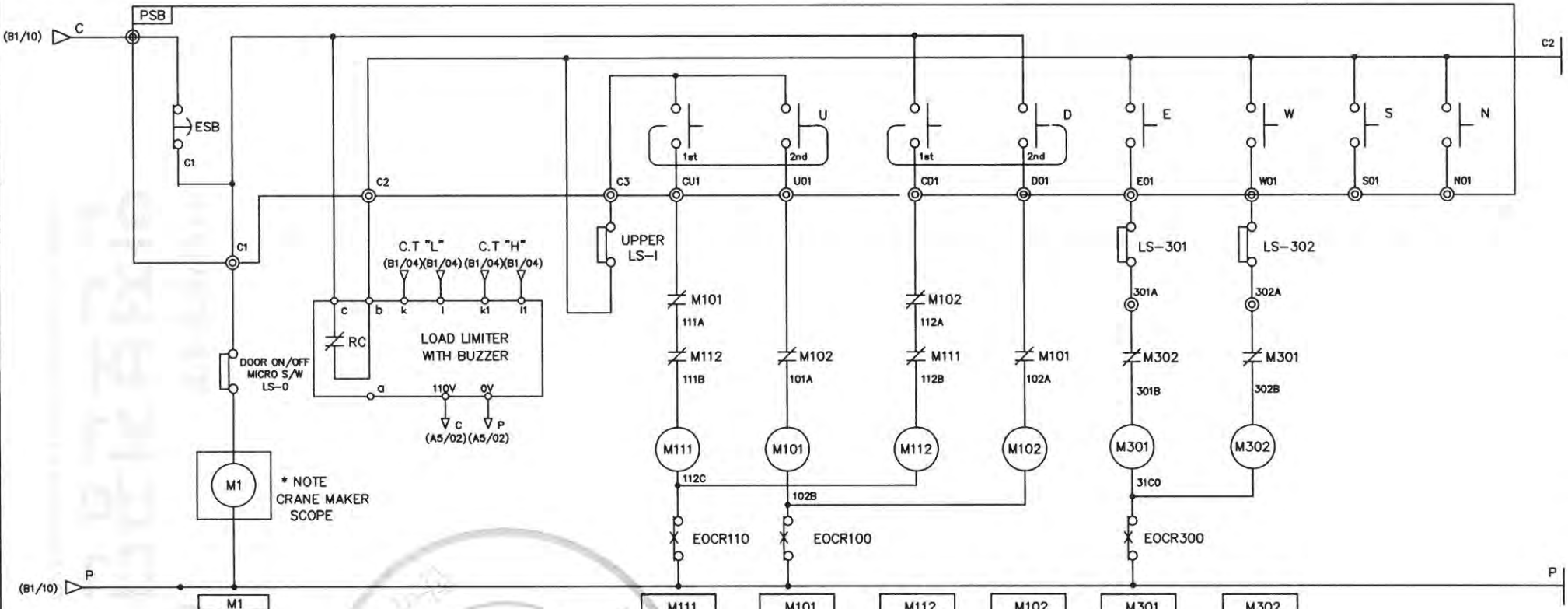

M1	
A	B1/05
A	B1/05
A	B1/05
a	
a	
b	
b	

M111	
A	B1/12
A	B1/12
A	B1/12
a	B1/15
a	B1/15
b	A5/12
b	

M101	
A	B1/05
A	B1/05
A	B1/05
a	B1/07
a	B1/07
b	A5/09
b	A5/13

M112	
A	B1/16
A	B1/16
A	B1/16
a	B1/16
a	B1/16
b	A5/09
b	

M102	
A	B1/08
A	B1/08
A	B1/08
a	B1/08
a	B1/08
b	A5/10
b	A5/12

M301	
A	C1/07
A	C1/07
A	C1/07
a	
a	
b	A5/16
b	

M302	
A	C1/13
A	C1/13
A	C1/13
a	
a	
b	A5/15
b	

SPECIFICATION / SYMBOLS / DESCRIPTION	UPPER LIMIT	PENDANT P.B S/W	LOAD LIMITER	LIMIT SWITCH
	LS-1	E.S.B	LOAD LIMITER	LS-301,302
	AC 600V 75A	250V 3A	JDLS-70	HY - W904
	AC 600V 3A	250V 3A	JDLS-70	HY - W904
MAKER	KUKDONG	KGAUTO	JEUNGHO	HANYOUNG

MK	DATE	REVISIONS	CHK.	APP.
4				
3				
2				
1				

CUSTOMER		DRAWING	DESIGN	CHECKED	APPROVED	SCALE	DATE	ORDER NO.
DRAWING TITLE	MAIN POWER 2 & CONTROL CIRCUIT DIAGRAM					NONE		
		KD 극동호이스트 주식회사 KUK DONG HOIST CO., LTD.				DWG. NO	KDC3E002	

불법복제 및 배포금지

1	2	3	4	5	6	7	8	9	10	11	12	13	14	15	16	17	18	19	20.
CONTROL CIRCUIT																			ADR'S NO.
EM.STOP	LOAD LIMIT					CREEP UP	UP	CREEP DOWN	DOWN	EAST-LOW				WEST-LOW		HIGH SPEED			A5

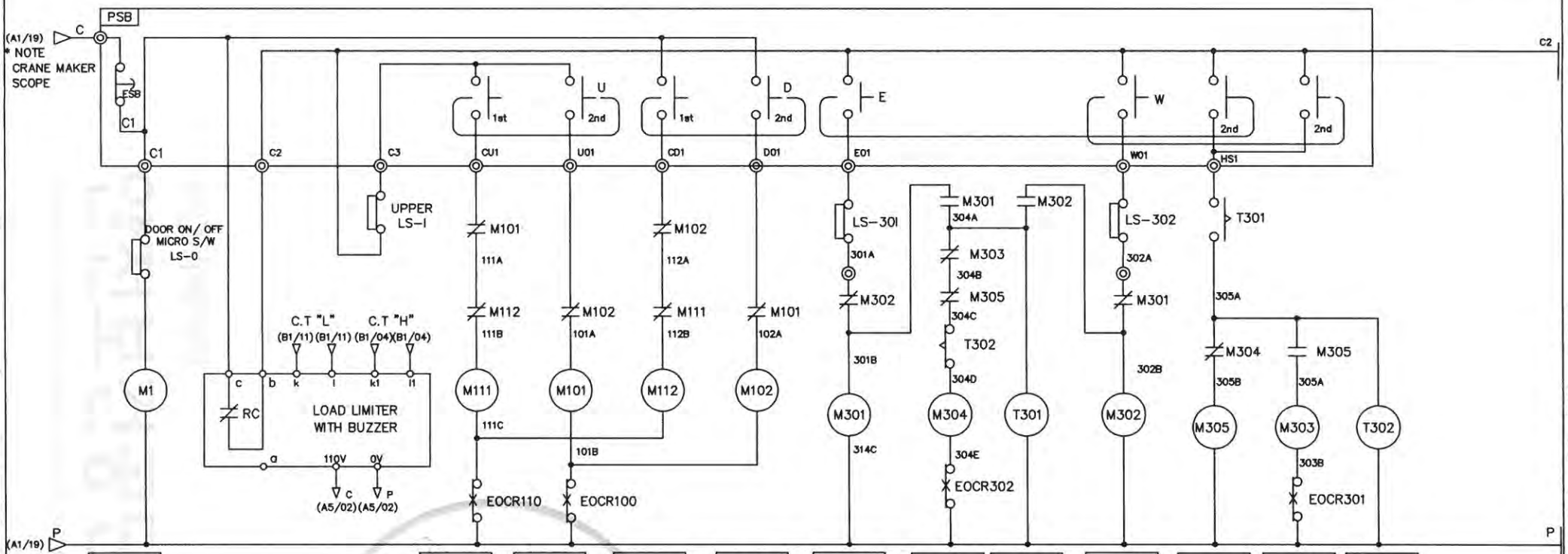

M1	
A	B1/05
A	B1/05
A	B1/05
a	
a	
b	
b	

M111	
A	B1/12
A	B1/12
A	B1/12
a	B1/15
a	B1/15
b	A5/09
b	

M101	
A	B1/05
A	B1/05
A	B1/05
a	B1/07
a	B1/07
b	A5/07
b	A5/10

M112	
A	B1/16
A	B1/16
A	B1/16
a	B1/16
a	B1/16
b	A5/07
b	

M102	
A	B1/08
A	B1/08
A	B1/08
a	B1/08
a	B1/08
b	A5/08
b	A5/09

M301	
A	C1/07
A	C1/07
A	C1/08
a	A5/13
a	
b	A5/14
b	

M304	
A	C2/11
A	C2/12
A	C2/12
a	
a	
b	A5/15
b	

T301	
a	A5/16
a	
b	
b	

M302	
A	C1/13
A	C1/13
A	C1/13
a	A5/14
a	
b	A5/11
b	

M305	
A	C2/11
A	C2/12
A	C2/12
a	A5/17
a	
b	A5/13
b	

M303	
A	C2/07
A	C2/07
A	C2/07
a	
a	
b	A5/13
b	

T302	
a	
a	
b	A5/13
b	

SPECIFICATION / SYMBOLS / DESCRIPTION	UPPER LIMIT	PENDANT P.B S/W	LOAD LIMITER	LIMIT SWITCH
	LS-1	E.S.B	LOAD LIMITER	LS-301,302
	AC 600V 75A	250V 3A	JDL-100	HY - M904
	AC 600V 3A	250V 3A	JDL-100	HY - M904
MAKER	KUKDONG	KGAUTO	JEUNGHO	HANYOUNG

MK	DATE	REVISIONS	CHK.	APP.
4				
3				
2				
1				

CUSTOMER		DRAWING	DESIGN	CHECKED	APPROVED	SCALE	DATE	ORDER NO.
DRAWING TITLE	HOIST CONTROL CIRCUIT DIAGRAM					NONE		
		극동호이스트 주식회사 KUK DONG HOIST CO., LTD.				DWG. NO	KDC3E003	

무단배포 및 복제 금지

1	2	3	4	5	6	7	8	9	10	11	12	13	14	15	16	17	18	19	20.
CONTROL CIRCUIT																			ADR'S NO.
EM.STOP	LOAD LIMIT				CREEP UP		UP	CREEP DOWN	DOWN	EAST-LOW			WEST-LOW		HIGH SPEED		SOUTH	NORTH	A5

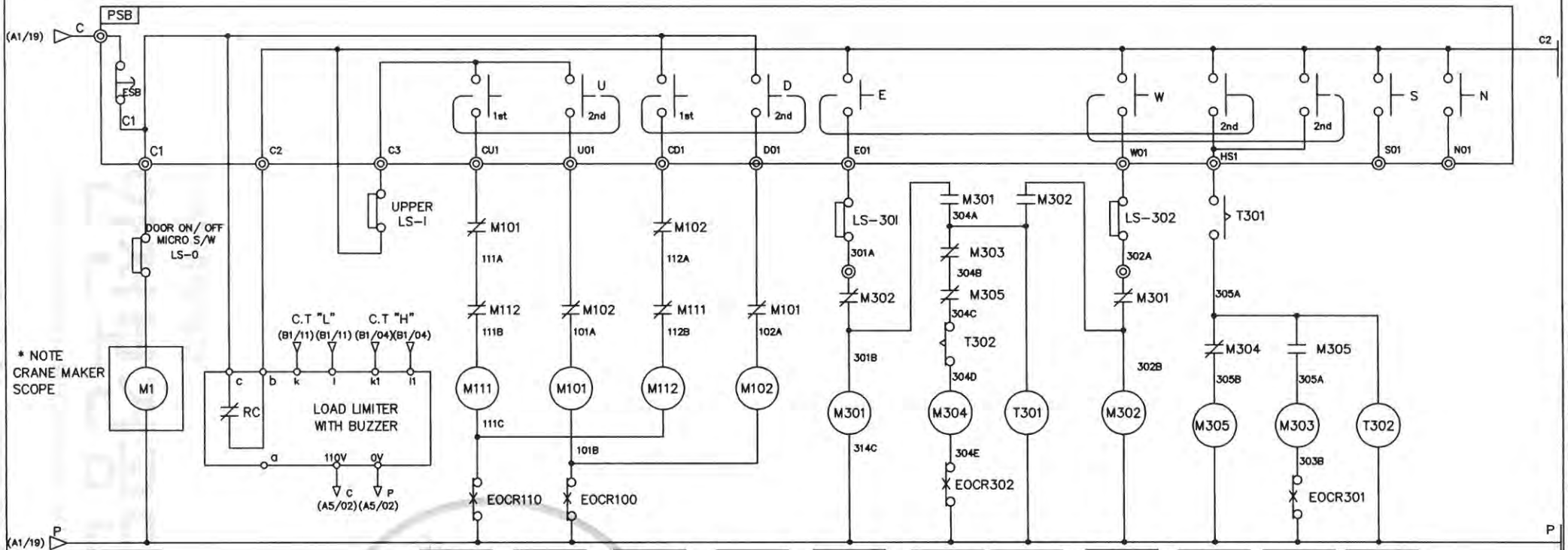

M1	
A	B1/05
A	B1/05
A	B1/05
a	
a	
b	
b	

M111	
A	B1/12
A	B1/12
A	B1/12
a	B1/15
a	B1/15
b	A5/09
b	

M101	
A	B1/05
A	B1/05
A	B1/05
a	B1/07
a	B1/07
b	A5/07
b	A5/10

M112	
A	B1/16
A	B1/16
A	B1/16
a	B1/16
a	B1/16
b	A5/07
b	

M102	
A	B1/08
A	B1/08
A	B1/08
a	B1/08
a	B1/08
b	A5/08
b	A5/09

M301	
A	C1/07
A	C1/07
A	D1/08
a	A5/13
a	
b	A5/15
b	

M304	
A	C2/11
A	C2/12
A	C2/12
a	
a	
b	A5/16
b	

T301	
a	A5/16
a	
b	
b	

M302	
A	C1/13
A	C1/13
A	C1/13
a	A5/14
a	
b	A5/11
b	

M305	
A	C2/11
A	C2/12
A	C2/12
a	A5/17
a	
b	A5/13
b	

M303	
A	C2/07
A	C2/07
A	C2/07
a	
a	
b	A5/13
b	

T302	
a	
a	
b	A5/13
b	

SPECIFICATION / SYMBOLS / DESCRIPTION	UPPER LIMIT	PENDANT P.B S/W	LOAD LIMITER	LIMIT SWITCH
	LS-1	E.S.B	LOAD LIMITER	LS-301,302
	AC 600V 75A	250V 3A	JDL-100	HY - M904
	AC 600V 3A	250V 3A	JDL-100	HY - M904
MAKER	KUKDONG	KGAUTO	JEUNGHO	HANYOUNG

MK	DATE	REVISIONS	CHK.	APP.
4				
3				
2				
1				

CUSTOMER		DRAWING	DESIGN	CHECKED	APPROVED	SCALE	DATE	ORDER NO.
DRAWING TITLE	HOIST CONTROL CIRCUIT DIAGRAM					NONE		
		국동호이스트 주식회사 KUK DONG HOIST CO., LTD.				DWG. NO	KDC3E004	

불량품 제 및 배포금지

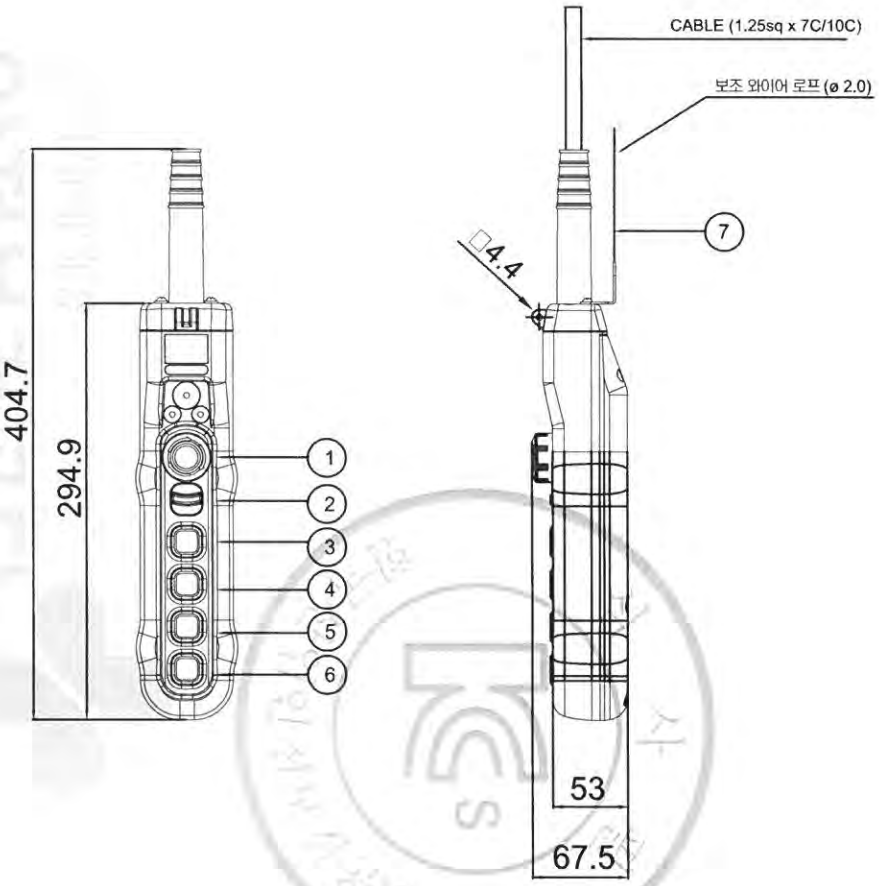

구분 / 색상	조작버튼	표시등
적색	비상	비상
황색	비정상	비정상
녹색	정상	정상
청색	의무	의무
흰색,회색,흑색	지정된의미없음	기타

* MATERIAL : POLYCARBOBATE(PLASTIC)
* BODY COLOR : YELLOW, BLACK
* IP : 55 이상

NO	SYMBOL	TYPE	SPEC.	COLOR
1	E.B.S	PUSH LOCK TURN RESET TYPE	250VAC x 6A	RED
2	SPARE			BLACK
3	상	1 BUTTON 2STEP		
4	하	1 BUTTON 2STEP		
5	동(전)	1 BUTTON 1STEP(2STEP)		
6	서(후)	1 BUTTON 1STEP(2STEP)		
7	보조 와이어	ø 2.0		

MK	DATE	REVISIONS	CHK.	APP.	CUSTOMER		DRAWING	DESIGN	CHECKED	APPROVED	SCALE	DATE
3												
2					DRAWING TITLE	PENDANT PUSH BUTTON SWITCH						
1						LAY OUT	KD KUK DONG HOIST CO., LTD.			DWG. NO		

불법복제 및 배포금지

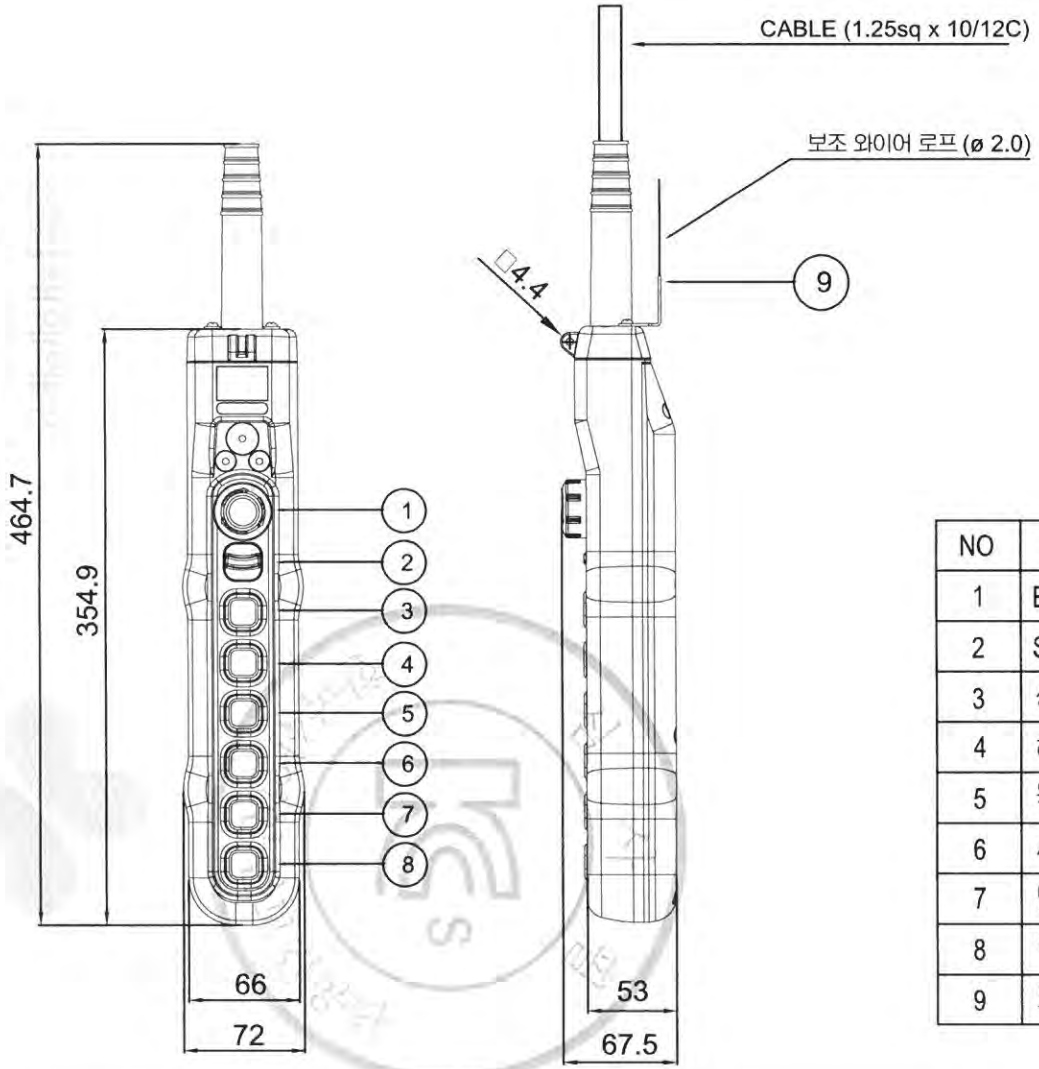

색상 \ 구분	조작버튼	표시등
적색	비상	비상
황색	비정상	비정상
녹색	정상	정상
청색	의무	의무
흰색,회색-흑색	지정된의미없음	기타

* MATERIAL : POLYCARBOBATE(PLASTIC)
* BODY COLOR : YELLOW, BLACK
* IP : 55 이상

NO	SYMBOL	TYPE	SPEC.	COLOR
1	E.B.S	PUSH LOCK TURN RESET TYPE	250VAC x 6A	RED
2	SPARE			BLACK
3	상	1 BUTTON 2STEP		
4	하	1 BUTTON 2STEP		
5	동 (좌)	1 BUTTON 1STEP(2STEP)		
6	서 (우)	1 BUTTON 1STEP(2STEP)		
7	남 (전)	1 BUTTON 1STEP		
8	북 (후)	1 BUTTON 1STEP		
9	보조 WIRE	ø 2.0		

MK	DATE	REVISIONS	CHK.	APP.	CUSTOMER		DRAWING	DESIGN	CHECKED	APPROVED	SCALE	DATE
3												
2					DRAWING TITLE	PENDANT PUSH BUTTON SWITCH						
1						LAY OUT	KD KUK DONG HOIST CO., LTD.			DWG. NO		

무단복제 및 배포금지

불법복제 및 배포금지

▣ I-BEAM 최대지지거리

☞ 최대지지거리 판정결과

I-BEAM 규격	최대 지지거리 (cm)	처짐량 판정1 > 800	처짐량 판정2 >1000	굽힘응력(kg/㎠) < 1159
150×125×t8.5/14	220	986.7	1000.1	1091
200×150×t9/16	350	972.1	1001.3	945.9
250×125×t7.5/12.5	370	1016.1	1040.7	1147.7
250×125×t10/19	440	997	1038.5	969.6
300×150×t8/13	510	962	1002.4	1092.1
300×150×t10/18.5	590	941.4	1003.4	947.7
300×150×t11.5/22	630	941	1018.6	884.8
350×150×t9/15	640	959.4	1020.6	1080.6
350×150×t12/24	780	907.4	1012.6	917.2
400×150×t10/18	810	918.9	1010.3	1104.4
400×150×t12.5/25	930	875.1	1008	990.4
450×175×t11/20	1030	875.3	1016.2	1066.1
450×175×t13/26	1150	828.1	1014.9	986.5

☞ 기본 조건

정격하중 (Kg)	양정 (m)	권상속도 (m/min)	호이스트		작업계수	풍력계수
			자중 (Kg)	풍압면적 (㎡)		
3000	12	9	665	1.5	1.08	1.2

*첨부 강도계산서 참조

안전보건공단

불법복제 및 배포금지

[I-BEAM 최대 지지거리 강도계산서]

1. 굽힘 MOMENT 계산

1-1. 수직하중에 의한 굽힘 MOMENT

빔 자중에 의한 MOMENT : $Ms = \dfrac{\phi \times \text{BEAM자중(등분포하중)} \times \text{지지거리}}{8}$ (kg · cm)

※ 작업계수(ϕ) = 1.08

※ BEAM 자중 (kg) = BEAM 단위중량(kg/cm) x 지지거리(cm)

이동하중에 의한 MOMENT : $Md = \dfrac{\phi \times \Psi \times \text{이동하중} \times \text{지지거리}}{4}$ (kg · cm)

※ 이동하중 (kg) = 정격하중 + 호이스트 자중
= 3000 + 665 = 3665 (kg)

※ 충격계수(Ψ) = 1 + 0.6V (단, Ψ <1.1 이면 Ψ = 1.1, Ψ > 1.6 이면 Ψ = 1.6 으로 한다.
= 1 + (0.6 x 0.15) = 1.09 -----> 1.1

※ 권상속도(V) = $\dfrac{9}{60}$ (m/min) = 0.15 (m/sec)

수직하중에 의한 굽힘 MOMENT : ΣMv = Ms + Md

1-2. 풍하중에 의한 굽힘 MOMENT

풍하중에 의한 MOMENT : $Mw = \dfrac{\text{풍하중(W)} \times \text{지지거리}}{2}$

※풍하중 (W) = 속도압(q) x 풍력계수 x 풍압을 받는 면적 (A) (kg)

※속도압(q) : = 8.5 x $\sqrt[4]{h}$ = 15.8 (h= 양정: 12)

※풍력계수(C) = 1.2 (크레인 제작기준 참조)

※풍압을 받는 면적 (A) = I-BEAM의 풍압면적 + HOIST의 풍압면적 (㎡)

※HOIST의 풍압 면적 ≒ 1.5 (㎡)

2. 굽힘 응력 계산

2-1. 수직하중에 의한 굽힘 응력

$\sigma_v = \dfrac{\text{수직하중에 의한 굽힘MOMENT : } \Sigma Mv}{\text{단면 계수 : } Zx}$ (kg/㎠)

2-2. 풍하중에 의한 굽힘 응력

$\sigma_w = \dfrac{\text{풍하중에 의한 굽힘 MOMENT : } Mw}{\text{단면계수 : } Zy}$ (kg/㎠)

2-3. 수직하중 및 풍하중에 의한 굽힘 응력

$\Sigma\sigma = \sigma_v + \sigma_w$

검사필 KCS 안전보건공단

표1. I-BEAM 최대지지거리에 따른 굽힘응력 계산 결과

I-BEAM 규격	최대지지거리(cm)	I-BEAM		단면계수		Ms	Md	ΣMv	I-BEAM 풍압면적 (㎡)	W (kg)	Mw (kg · cm)	σv (kg/㎠)	σw (kg/㎠)
		단위중량 (kg/cm)	자중 (kg)	Zx (㎤)	Zy (㎤)	(kg · cm)	(kg · cm)	(kg · cm)					
150×125×t8.5/14	220	0.362	79.64	235	61.6	2365.31	239471.10	241836.41	0.33	34.70	3816.65	1029.09	61.96
200×150×t9/16	350	0.504	176.4	446	100	8334.90	380976.75	389311.65	0.70	41.71	7299.60	872.90	73.00
250×125×t7.5/12.5	370	0.383	141.71	414	53.9	7078.41	402746.85	409825.26	0.93	45.98	8505.93	989.92	157.81
250×125×t10/19	440	0.555	244.2	585	86	14505.48	478942.20	493447.68	1.10	49.30	10845.12	843.50	126.11
300×150×t8/13	510	0.483	246.33	632	78.4	16959.82	555137.55	572097.37	1.53	57.45	14649.44	905.22	186.86
300×150×t10/18.5	590	0.655	386.45	849	118	30780.74	642217.95	672998.69	1.77	62.00	18289.76	792.70	155.00
300×150×t11.5/22	630	0.768	483.84	978	143	41150.59	685758.15	726908.74	1.89	64.27	20246.44	743.26	141.58
350×150×t9/15	640	0.585	374.4	870	93.5	32348.16	696643.20	728991.36	2.24	70.91	22691.33	837.92	242.69
350×150×t12/24	780	0.872	680.16	1280	158	71620.85	849033.90	920654.75	2.73	80.20	31278.31	719.26	197.96
400×150×t10/18	810	0.72	583.2	1200	115	63772.92	881689.05	945461.97	3.24	89.87	36397.51	787.88	316.50
400×150×t12.5/25	930	0.958	890.94	1580	165	111857.52	1012309.65	1124167.17	3.72	98.97	46021.61	711.50	278.92
450×175×t11/20	1030	0.917	944.51	1740	173	131334.12	1121160.15	1252494.27	4.64	116.32	59904.59	719.82	346.27
450×175×t13/26	1150	1.15	1322.5	2170	231	205318.13	1251780.75	1457098.88	5.18	126.56	72770.85	671.47	315.03

무단복제 및 배포금지

불법복제 및 배포금지

[I-BEAM의 처짐량(Deflection) 및 최대굽힘응력 판정 결과]

1. 처짐량 판정 1
   판정기준: $L / \sigma > 800$
   ※ $\sigma = \sigma_s + \sigma_d$

2. 처짐량 판정 2
   판정기준: $L / \sigma_d > 1000$

3. 최대굽힘응력 판정
   판정기준: $\Sigma\sigma \leq 1159$ (kg/㎠) (= SS400 허용굽힘응력 1449 x 0.8)
   ※ $\Sigma\sigma = \sigma_v + \sigma_w$

※I-BEAM 자중에 의한 처짐(σs)

$$\sigma_s = \frac{5 \times \text{I-Beam자중} \times \text{지지거리}^3}{384 \times E \times Ix}$$

※이동하중에 의한 처짐(σd)

$$\sigma_d = \frac{(\text{정격하중} + \text{호이스트 자중}) \times \text{지지거리}^3}{48 \times E \times Ix}$$

E = 종탄성계수 (2,100,000 kg/㎠)
Ix = 단면2차MOMENT

					판정기준		
					> 800	> 1000	≤ 1159
I-BEAM 규격	Ix (cm^4)	최대지지거리(cm)	σs (cm)	σd (cm)	처짐량판정1	처짐량판정2	$\Sigma\sigma$ (kg/㎠)
150×125×t8.5/14	1760	220	0.0030	0.2200	986.7	1000.1	1091
200×150×t9/16	4460	350	0.0105	0.3495	972.1	1001.3	945.9
250×125×t7.5/12.5	5180	370	0.0086	0.3555	1016.1	1040.7	1147.7
250×125×t10/19	7310	440	0.0176	0.4237	997	1038.5	969.6
300×150×t8/13	9480	510	0.0214	0.5088	962	1002.4	1092.1
300×150×t10/18.5	12700	590	0.0387	0.5880	941.4	1003.4	947.7
300×150×t11.5/22	14700	630	0.0510	0.6185	941	1018.6	884.8
350×150×t9/15	15200	640	0.0400	0.6271	959.4	1020.6	1080.6
350×150×t12/24	22400	780	0.0893	0.7703	907.4	1012.6	917.2
400×150×t10/18	24100	810	0.0797	0.8018	918.9	1010.3	1104.4
400×150×t12.5/25	31700	930	0.1402	0.9226	875.1	1008	990.4
450×175×t11/20	39200	1030	0.1632	1.0135	875.3	1016.2	1066.1
450×175×t13/26	48800	1150	0.2556	1.1331	828.1	1014.9	986.5

안전보건공단

불법복제 및 배포금지

▣ I-BEAM의 고정방법 및 사양

1. I-BEAM의 고정방법

용접구조	BOLT 체결구조	복합구조
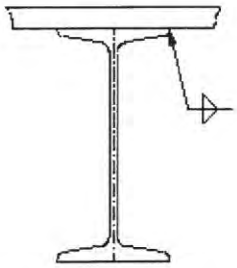	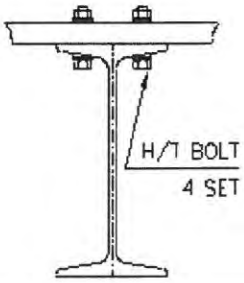	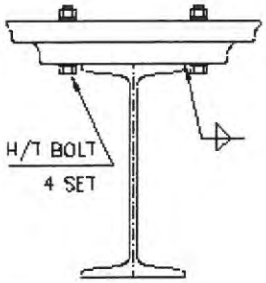

2. 기본조건 및 사양

* 동하중에 의한 용접이음의 허용응력(필렛용접 효율 포함) : 560kg/㎠
* 필렛 용접효율 : 80%
* H/T BOLT의 허용 인장응력 : 2,500kg/㎠

단위: mm

정격하중(Kg)	용접구조		BOLT 체결구조
	최소 용접두께	최소 용접길이	최소 BOLT SIZE
3000	6	150	M12 x 4set

단, 적용 I-BEAM 300×150×t10/18.5 의 경우임

※강도계산서 참조

안전보건공단

불법복제 및 배포금지

[I-BEAM 고정볼트 강도 및 용접강도 계산서]

1) I-BEAM 고정방법중 BOLT구조의 강도 계산

[H/T BOLT의 허용인장응력 : 2500 kg/㎠]

☞ 작용하중 계산

$P = \Psi \times (Q+Q1) + \phi \times Q2$

충격계수 Ψ =	1.1
작업계수 ϕ =	1.08
정격하중 Q =	3000
HOIST자중 Q1 =	665

☞ BOLT 1 개당 인장강도 계산

$$\sigma = \frac{P}{A} = 4 \times \frac{P}{(\pi \times d2 \times z)}$$

※ 판정기준: σ < 2500 kg/㎠

BEAM 규격	BEAM자중 (kg)	하중 P(kg)	BOLT 규격	BOLT수	BOLT 단면적 (㎠)	BOLT강도
250×125×t7.5/12.5	141.71	4184.5	M12	4	1.13	925.8
300×150×t10/18.5	386.45	4448.9	M12	4	1.13	984.3
350×150×t9/15	374.4	4435.9	M12	4	1.13	981.4
400×150×t10/18	583.2	4661.4	M12	4	1.13	1031.3
450×175×t11/20	944.51	5051.6	M12	4	1.13	1117.6

안전보건공단

불법복제 및 배포금지

2) I-BEAM 고정방법중 용접구조의 강도 계산

[용접이음의 허용응력: 560 kg/㎠]

☞ 용접강도 계산

$$\sigma w = \frac{P}{0.707 x t x 2 x l} \quad kg/㎠$$

※ 판정기준: σw < 560 kg/㎠

BEAM 규격	하중 P(kg)	용접두께 t(cm)	용접길이 l(cm)	용접강도 σw(kg/㎠)
250 × 125 × t7.5/12.5	4184.5	0.6	12.5	394.6
300 × 150 × t10/18.5	4448.9	0.6	15	349.6
350 × 150 × t9/15	4435.9	0.6	15	348.6
400 × 150 × t10/18	4661.4	0.6	15	366.3
450 × 175 × t11/20	5051.6	0.6	17.5	340.2

심사필
KCS
한국산업안전보건공단
안전보건공단

불법복제 및 배포금지

THREE PHASE INDUCTION MOTOR DATA SHEET

SCHEDULE OF TECHNICAL DATA

1. SERVICE	HOISTING
2. MANUFACTURE	극동 호이스트 (주)
3. FRAME NUMBER	132 L
4. RATED POWER	5.5 KW x 4 P
5. RATED VOLTAGE AND FREQUENCY	220 V 60 Hz
6. MOTOR TYPE	SQUIRREL CAGE ROTOR TYPE
7. SERVICE FACTOR AND RATTING	1 . 0 , 30 MIN
8. LOCATION AND INSULATION CLASS	INDOOR, OUTDOOR, B CLASS
9. DESIGN TEMPERATURE RISE(BY RESISTANCE)	80 ℃
10. FULL LOAD SPEED	1692 RPM
11. FULL LOAD CURRENT	22.8 A
12. STARTING CURRENT AT RATED VOLTAGE	138.0 A
13. MINIMUM STARTING VOLTAGE	200 V
14. EFFICIENCY AT 100% RATED LOAD	81.0 %
15. POWER FACTOR AT 100% RATED LOAD	77.0 %
16. STARTING TORQUE	6.4 KG.M
17. SITE ALTITUDE(UNDER)	1000 M
18. ENCLOSURE & COOLING METHOD	T E F C
19. TYPE OF BEARING	PL : 6206zz OPL : 6206zz
20. MOUNTING	H O R I Z O N T A L
21. MAXIMUM AMBIENT TEMPERATURE	40 ℃
22. BEARING LUBRICATION	G R E A S E
23. STARTING METHOD	F U L L V O L T A G E

불법복제 및 배포금지

THREE PHASE INDUCTION MOTOR DATA SHEET

SCHEDULE OF TECHNICAL DATA

1. SERVICE	HOISTING
2. MANUFACTURE	극동 호이스트 (주)
3. FRAME NUMBER	132 L
4. RATED POWER	5.5 KW x 4 P
5. RATED VOLTAGE AND FREQUENCY	380 V 60 Hz
6. MOTOR TYPE	SQUIRREL CAGE ROTOR TYPE
7. SERVICE FACTOR AND RATTING	1 . 0 , 30 MIN
8. LOCATION AND INSULATION CLASS	INDOOR, OUTDOOR, B CLASS
9. DESIGN TEMPERATURE RISE(BY RESISTANCE)	80 ℃
10. FULL LOAD SPEED	1692 RPM
11. FULL LOAD CURRENT	12.2 A
12. STARTING CURRENT AT RATED VOLTAGE	79.0 A
13. MINIMUM STARTING VOLTAGE	345 V
14. EFFICIENCY AT 100% RATED LOAD	81.0 %
15. POWER FACTOR AT 100% RATED LOAD	77.0 %
16. STARTING TORQUE	6.4 KG.M
17. SITE ALTITUDE(UNDER)	1000 M
18. ENCLOSURE & COOLING METHOD	T E F C
19. TYPE OF BEARING	PL : 6206zz OPL : 6206zz
20. MOUNTING	H O R I Z O N T A L
21. MAXIMUM AMBIENT TEMPERATURE	40 ℃
22. BEARING LUBRICATION	G R E A S E
23. STARTING METHOD	F U L L V O L T A G E

불법복제 및 배포금지

THREE PHASE INDUCTION MOTOR DATA SHEET

SCHEDULE OF TECHNICAL DATA

1. SERVICE	HOISTING
2. MANUFACTURE	극동 호이스트 (주)
3. FRAME NUMBER	132 L
4. RATED POWER	5.5 KW x 4 P
5. RATED VOLTAGE AND FREQUENCY	440 V 60 Hz
6. MOTOR TYPE	SQUIRREL CAGE ROTOR TYPE
7. SERVICE FACTOR AND RATTING	1 . 0 , 30 MIN
8. LOCATION AND INSULATION CLASS	INDOOR, OUTDOOR, B CLASS
9. DESIGN TEMPERATURE RISE(BY RESISTANCE)	80 ℃
10. FULL LOAD SPEED	1692 RPM
11. FULL LOAD CURRENT	10.5 A
12. STARTING CURRENT AT RATED VOLTAGE	67.8 A
13. MINIMUM STARTING VOLTAGE	400 V
14. EFFICIENCY AT 100% RATED LOAD	81.0 %
15. POWER FACTOR AT 100% RATED LOAD	77.0 %
16. STARTING TORQUE	6.4 KG.M
17. SITE ALTITUDE(UNDER)	1000 M
18. ENCLOSURE & COOLING METHOD	T E F C
19. TYPE OF BEARING	PL : 6206zz OPL : 6206zz
20. MOUNTING	H O R I Z O N T A L
21. MAXIMUM AMBIENT TEMPERATURE	40 ℃
22. BEARING LUBRICATION	G R E A S E
23. STARTING METHOD	F U L L V O L T A G E

불법복제 및 배포금지

THREE PHASE INDUCTION MOTOR DATA SHEET

SCHEDULE OF TECHNICAL DATA

1. SERVICE	HOISTING
2. MANUFACTURE	극동 호이스트 (주)
3. FRAME NUMBER	132 L
4. RATED POWER	5.5 KW x 4 P
5. RATED VOLTAGE AND FREQUENCY	460 V 60 Hz
6. MOTOR TYPE	SQUIRREL CAGE ROTOR TYPE
7. SERVICE FACTOR AND RATTING	1 . 0 , 30 MIN
8. LOCATION AND INSULATION CLASS	INDOOR, OUTDOOR, B CLASS
9. DESIGN TEMPERATURE RISE(BY RESISTANCE)	80 ℃
10. FULL LOAD SPEED	1692 RPM
11. FULL LOAD CURRENT	10.0 A
12. STARTING CURRENT AT RATED VOLTAGE	64.5 A
13. MINIMUM STARTING VOLTAGE	418 V
14. EFFICIENCY AT 100% RATED LOAD	81.0 %
15. POWER FACTOR AT 100% RATED LOAD	77.0 %
16. STARTING TORQUE	6.4 KG.M
17. SITE ALTITUDE(UNDER)	1000 M
18. ENCLOSURE & COOLING METHOD	T E F C
19. TYPE OF BEARING	PL : 6206zz OPL : 6206zz
20. MOUNTING	H O R I Z O N T A L
21. MAXIMUM AMBIENT TEMPERATURE	40 ℃
22. BEARING LUBRICATION	G R E A S E
23. STARTING METHOD	F U L L V O L T A G E

불법복제 및 배포금지

THREE PHASE INDUCTION MOTOR DATA SHEET

SCHEDULE OF TECHNICAL DATA

1. SERVICE	HOISTING
2. MANUFACTURE	극동 호이스트 (주)
3. FRAME NUMBER	132 L
4. RATED POWER	5.5 KW x 4 P
5. RATED VOLTAGE AND FREQUENCY	480 V 60 Hz
6. MOTOR TYPE	SQUIRREL CAGE ROTOR TYPE
7. SERVICE FACTOR AND RATTING	1 . 0 , 30 MIN
8. LOCATION AND INSULATION CLASS	INDOOR, OUTDOOR, B CLASS
9. DESIGN TEMPERATURE RISE(BY RESISTANCE)	80 ℃
10. FULL LOAD SPEED	1692 RPM
11. FULL LOAD CURRENT	9.6 A
12. STARTING CURRENT AT RATED VOLTAGE	61.9 A
13. MINIMUM STARTING VOLTAGE	436 V
14. EFFICIENCY AT 100% RATED LOAD	81.0 %
15. POWER FACTOR AT 100% RATED LOAD	77.0 %
16. STARTING TORQUE	6.4 KG.M
17. SITE ALTITUDE(UNDER)	1000 M
18. ENCLOSURE & COOLING METHOD	T E F C
19. TYPE OF BEARING	PL : 6206zz OPL : 6206zz
20. MOUNTING	H O R I Z O N T A L
21. MAXIMUM AMBIENT TEMPERATURE	40 ℃
22. BEARING LUBRICATION	G R E A S E
23. STARTING METHOD	F U L L V O L T A G E

불법복제 및 배포금지

THREE PHASE INDUCTION MOTOR DATA SHEET

SCHEDULE OF TECHNICAL DATA

1. SERVICE	HOISTING
2. MANUFACTURE	극동호이스트 (주)
3. FRAME NUMBER	90 L
4. RATED POWER	1.5 KW x 4 P
5. RATED VOLTAGE AND FREQUENCY	220 V 60 Hz
6. MOTOR TYPE	SQUIRREL CAGE ROTOR TYPE
7. SERVICE FACTOR AND RATTING	1 . 0 , 30 MIN
8. LOCATION AND INSULATION CLASS	INDOOR, OUTDOOR, B CLASS
9. DESIGN TEMPERATURE RISE(BY RESISTANCE)	80 ℃
10. FULL LOAD SPEED	1690 RPM
11. FULL LOAD CURRENT	7.3 A
12. STARTING CURRENT AT RATED VOLTAGE	42.0 A
13. MINIMUM STARTING VOLTAGE	200 V
14. EFFICIENCY AT 100% RATED LOAD	73.0 %
15. POWER FACTOR AT 100% RATED LOAD	75.0 %
16. STARTING TORQUE	1.72 KG.M
17. SITE ALTITUDE(UNDER)	1000 M
18. ENCLOSURE & COOLING METHOD	T E N V
19. TYPE OF BEARING	PL : 6205zz OPL : 6204zz
20. MOUNTING	H O R I Z O N T A L
21. MAXIMUM AMBIENT TEMPERATURE	40 ℃
22. BEARING LUBRICATION	G R E A S E
23. STARTING METHOD	F U L L V O L T A G E

불법복제 및 배포금지

THREE PHASE INDUCTION MOTOR DATA SHEET

SCHEDULE OF TECHNICAL DATA

1. SERVICE	HOISTING
2. MANUFACTURE	극동호이스트 (주)
3. FRAME NUMBER	90 L
4. RATED POWER	1.5 KW x 4 P
5. RATED VOLTAGE AND FREQUENCY	380 V 60 Hz
6. MOTOR TYPE	SQUIRREL CAGE ROTOR TYPE
7. SERVICE FACTOR AND RATTING	1 . 0 , 30 MIN
8. LOCATION AND INSULATION CLASS	INDOOR, OUTDOOR, B CLASS
9. DESIGN TEMPERATURE RISE(BY RESISTANCE)	80 ℃
10. FULL LOAD SPEED	1690 RPM
11. FULL LOAD CURRENT	4.2 A
12. STARTING CURRENT AT RATED VOLTAGE	24.2 A
13. MINIMUM STARTING VOLTAGE	345 V
14. EFFICIENCY AT 100% RATED LOAD	73.0 %
15. POWER FACTOR AT 100% RATED LOAD	75.0 %
16. STARTING TORQUE	1.72 KG.M
17. SITE ALTITUDE(UNDER)	1000 M
18. ENCLOSURE & COOLING METHOD	T E N V
19. TYPE OF BEARING	PL : 6205zz OPL : 6204zz
20. MOUNTING	H O R I Z O N T A L
21. MAXIMUM AMBIENT TEMPERATURE	40 ℃
22. BEARING LUBRICATION	G R E A S E
23. STARTING METHOD	F U L L V O L T A G E

불법복제 및 배포금지

THREE PHASE INDUCTION MOTOR DATA SHEET

SCHEDULE OF TECHNICAL DATA

1. SERVICE	HOISTING
2. MANUFACTURE	극동호이스트 (주)
3. FRAME NUMBER	90 L
4. RATED POWER	1.5 KW x 4 P
5. RATED VOLTAGE AND FREQUENCY	440 V 60 Hz
6. MOTOR TYPE	SQUIRREL CAGE ROTOR TYPE
7. SERVICE FACTOR AND RATTING	1 . 0 , 30 MIN
8. LOCATION AND INSULATION CLASS	INDOOR, OUTDOOR, B CLASS
9. DESIGN TEMPERATURE RISE(BY RESISTANCE)	80 ℃
10. FULL LOAD SPEED	1690 RPM
11. FULL LOAD CURRENT	3.7A
12. STARTING CURRENT AT RATED VOLTAGE	21.0 A
13. MINIMUM STARTING VOLTAGE	400 V
14. EFFICIENCY AT 100% RATED LOAD	73.0 %
15. POWER FACTOR AT 100% RATED LOAD	75.0 %
16. STARTING TORQUE	1.72 KG.M
17. SITE ALTITUDE(UNDER)	1000 M
18. ENCLOSURE & COOLING METHOD	T E N V
19. TYPE OF BEARING	PL : 6205zz OPL : 6204zz
20. MOUNTING	H O R I Z O N T A L
21. MAXIMUM AMBIENT TEMPERATURE	40 ℃
22. BEARING LUBRICATION	G R E A S E
23. STARTING METHOD	F U L L V O L T A G E

불법복제 및 배포금지

THREE PHASE INDUCTION MOTOR DATA SHEET

SCHEDULE OF TECHNICAL DATA

1. SERVICE	HOISTING
2. MANUFACTURE	극동호이스트 (주)
3. FRAME NUMBER	90 L
4. RATED POWER	1.5 KW x 4 P
5. RATED VOLTAGE AND FREQUENCY	460 V 60 Hz
6. MOTOR TYPE	SQUIRREL CAGE ROTOR TYPE
7. SERVICE FACTOR AND RATTING	1 . 0 , 30 MIN
8. LOCATION AND INSULATION CLASS	INDOOR, OUTDOOR, B CLASS
9. DESIGN TEMPERATURE RISE(BY RESISTANCE)	80 ℃
10. FULL LOAD SPEED	1690 RPM
11. FULL LOAD CURRENT	3.5A
12. STARTING CURRENT AT RATED VOLTAGE	20.8 A
13. MINIMUM STARTING VOLTAGE	418 V
14. EFFICIENCY AT 100% RATED LOAD	73.0 %
15. POWER FACTOR AT 100% RATED LOAD	75.0 %
16. STARTING TORQUE	1.72 KG.M
17. SITE ALTITUDE(UNDER)	1000 M
18. ENCLOSURE & COOLING METHOD	T E N V
19. TYPE OF BEARING	PL : 6205zz OPL : 6204zz
20. MOUNTING	H O R I Z O N T A L
21. MAXIMUM AMBIENT TEMPERATURE	40 ℃
22. BEARING LUBRICATION	G R E A S E
23. STARTING METHOD	F U L L V O L T A G E

불법복제 및 배포금지

THREE PHASE INDUCTION MOTOR DATA SHEET

SCHEDULE OF TECHNICAL DATA

1. SERVICE	HOISTING
2. MANUFACTURE	극동호이스트 (주)
3. FRAME NUMBER	90 L
4. RATED POWER	1.5 KW x 4 P
5. RATED VOLTAGE AND FREQUENCY	480 V 60 Hz
6. MOTOR TYPE	SQUIRREL CAGE ROTOR TYPE
7. SERVICE FACTOR AND RATTING	1 . 0 , 30 MIN
8. LOCATION AND INSULATION CLASS	INDOOR, OUTDOOR, B CLASS
9. DESIGN TEMPERATURE RISE(BY RESISTANCE)	80 ℃
10. FULL LOAD SPEED	1690 RPM
11. FULL LOAD CURRENT	3.4A
12. STARTING CURRENT AT RATED VOLTAGE	20.0 A
13. MINIMUM STARTING VOLTAGE	436 V
14. EFFICIENCY AT 100% RATED LOAD	73.0 %
15. POWER FACTOR AT 100% RATED LOAD	75.0 %
16. STARTING TORQUE	1.72 KG.M
17. SITE ALTITUDE(UNDER)	1000 M
18. ENCLOSURE & COOLING METHOD	T E N V
19. TYPE OF BEARING	PL : 6205zz OPL : 6204zz
20. MOUNTING	H O R I Z O N T A L
21. MAXIMUM AMBIENT TEMPERATURE	40 ℃
22. BEARING LUBRICATION	G R E A S E
23. STARTING METHOD	F U L L V O L T A G E

불법복제 및 배포금지

THREE PHASE INDUCTION MOTOR DATA SHEET

SCHEDULE OF TECHNICAL DATA

1. SERVICE	TRAVERSING
2. MANUFACTURE	극동 호이스트 (주)
3. FRAME NUMBER	90 S
4. RATED POWER	0.75 KW x 4 P
5. RATED VOLTAGE AND FREQUENCY	220 V 60 Hz
6. MOTOR TYPE	SQUIRREL CAGE ROTOR TYPE
7. SERVICE FACTOR AND RATTING	1 . 0 , 30 MIN
8. LOCATION AND INSULATION CLASS	INDOOR, OUTDOOR, B CLASS
9. DESIGN TEMPERATURE RISE(BY RESISTANCE)	80 ℃
10. FULL LOAD SPEED	1760 RPM
11. FULL LOAD CURRENT	4.1 A
12. STARTING CURRENT AT RATED VOLTAGE	22.1 A
13. MINIMUM STARTING VOLTAGE	200 V
14. EFFICIENCY AT 100% RATED LOAD	66.0 %
15. POWER FACTOR AT 100% RATED LOAD	73.5 %
16. STARTING TORQUE	1.02 KG.M
17. SITE ALTITUDE(UNDER)	1000 M
18. ENCLOSURE & COOLING METHOD	T E N V
19. TYPE OF BEARING	PL : 6205zz OPL : 6204zz
20. MOUNTING	H O R I Z O N T A L
21. MAXIMUM AMBIENT TEMPERATURE	40 ℃
22. BEARING LUBRICATION	G R E A S E
23. STARTING METHOD	F U L L V O L T A G E

불법복제 및 배포금지

THREE PHASE INDUCTION MOTOR DATA SHEET

SCHEDULE OF TECHNICAL DATA

1. SERVICE	TRAVERSING
2. MANUFACTURE	극동 테크 (주)
3. FRAME NUMBER	90 S
4. RATED POWER	0.75 KW x 4 P
5. RATED VOLTAGE AND FREQUENCY	380 V 60 Hz
6. MOTOR TYPE	SQUIRREL CAGE ROTOR TYPE
7. SERVICE FACTOR AND RATTING	1 . 0 , 30 MIN
8. LOCATION AND INSULATION CLASS	INDOOR, OUTDOOR, B CLASS
9. DESIGN TEMPERATURE RISE(BY RESISTANCE)	80 ℃
10. FULL LOAD SPEED	1760 RPM
11. FULL LOAD CURRENT	2.4 A
12. STARTING CURRENT AT RATED VOLTAGE	13.5 A
13. MINIMUM STARTING VOLTAGE	345 V
14. EFFICIENCY AT 100% RATED LOAD	67.0 %
15. POWER FACTOR AT 100% RATED LOAD	69.5 %
16. STARTING TORQUE	0.85 KG.M
17. SITE ALTITUDE(UNDER)	1000 M
18. ENCLOSURE & COOLING METHOD	T E F C
19. TYPE OF BEARING	PL : 6205zz OPL : 6204zz
20. MOUNTING	H O R I Z O N T A L
21. MAXIMUM AMBIENT TEMPERATURE	40 ℃
22. BEARING LUBRICATION	G R E A S E
23. STARTING METHOD	F U L L V O L T A G E

불법복제 및 배포금지

THREE PHASE INDUCTION MOTOR DATA SHEET

SCHEDULE OF TECHNICAL DATA

1. SERVICE	TRAVERSING
2. MANUFACTURE	극동 호이스트 (주)
3. FRAME NUMBER	90 S
4. RATED POWER	0.75 KW x 4 P
5. RATED VOLTAGE AND FREQUENCY	440 V 60 Hz
6. MOTOR TYPE	SQUIRREL CAGE ROTOR TYPE
7. SERVICE FACTOR AND RATTING	1 . 0 , 30 MIN
8. LOCATION AND INSULATION CLASS	INDOOR, OUTDOOR, B CLASS
9. DESIGN TEMPERATURE RISE(BY RESISTANCE)	80 ℃
10. FULL LOAD SPEED	1760 RPM
11. FULL LOAD CURRENT	2.0 A
12. STARTING CURRENT AT RATED VOLTAGE	11.1 A
13. MINIMUM STARTING VOLTAGE	400 V
14. EFFICIENCY AT 100% RATED LOAD	67.0 %
15. POWER FACTOR AT 100% RATED LOAD	73.5 %
16. STARTING TORQUE	1.02 KG.M
17. SITE ALTITUDE(UNDER)	1000 M
18. ENCLOSURE & COOLING METHOD	T E N V
19. TYPE OF BEARING	PL : 6205zz OPL : 6204zz
20. MOUNTING	H O R I Z O N T A L
21. MAXIMUM AMBIENT TEMPERATURE	40 ℃
22. BEARING LUBRICATION	G R E A S E
23. STARTING METHOD	F U L L V O L T A G E

불법복제 및 배포금지

THREE PHASE INDUCTION MOTOR DATA SHEET

SCHEDULE OF TECHNICAL DATA

1. SERVICE	TRAVERSING
2. MANUFACTURE	극동 호이스트 (주)
3. FRAME NUMBER	90 S
4. RATED POWER	0.75 KW x 4 P
5. RATED VOLTAGE AND FREQUENCY	460 V 60 Hz
6. MOTOR TYPE	SQUIRREL CAGE ROTOR TYPE
7. SERVICE FACTOR AND RATTING	1 . 0 , 30 MIN
8. LOCATION AND INSULATION CLASS	INDOOR, OUTDOOR, B CLASS
9. DESIGN TEMPERATURE RISE(BY RESISTANCE)	80 ℃
10. FULL LOAD SPEED	1760 RPM
11. FULL LOAD CURRENT	2.0 A
12. STARTING CURRENT AT RATED VOLTAGE	10.6 A
13. MINIMUM STARTING VOLTAGE	418 V
14. EFFICIENCY AT 100% RATED LOAD	66.0 %
15. POWER FACTOR AT 100% RATED LOAD	73.5 %
16. STARTING TORQUE	1.02 KG.M
17. SITE ALTITUDE(UNDER)	1000 M
18. ENCLOSURE & COOLING METHOD	T E N V
19. TYPE OF BEARING	PL : 6205zz OPL : 6204zz
20. MOUNTING	H O R I Z O N T A L
21. MAXIMUM AMBIENT TEMPERATURE	40 ℃
22. BEARING LUBRICATION	G R E A S E
23. STARTING METHOD	F U L L V O L T A G E

불법복제 및 배포금지

THREE PHASE INDUCTION MOTOR DATA SHEET

SCHEDULE OF TECHNICAL DATA

1. SERVICE	TRAVERSING
2. MANUFACTURE	극동 호이스트 (주)
3. FRAME NUMBER	90 S
4. RATED POWER	0.75 KW x 4 P
5. RATED VOLTAGE AND FREQUENCY	480 V 60 Hz
6. MOTOR TYPE	SQUIRREL CAGE ROTOR TYPE
7. SERVICE FACTOR AND RATTING	1 . 0 , 30 MIN
8. LOCATION AND INSULATION CLASS	INDOOR, OUTDOOR, B CLASS
9. DESIGN TEMPERATURE RISE(BY RESISTANCE)	80 ℃
10. FULL LOAD SPEED	1760 RPM
11. FULL LOAD CURRENT	1.9 A
12. STARTING CURRENT AT RATED VOLTAGE	10.2 A
13. MINIMUM STARTING VOLTAGE	436 V
14. EFFICIENCY AT 100% RATED LOAD	66.0 %
15. POWER FACTOR AT 100% RATED LOAD	73.5 %
16. STARTING TORQUE	1.02 KG.M
17. SITE ALTITUDE(UNDER)	1000 M
18. ENCLOSURE & COOLING METHOD	T E N V
19. TYPE OF BEARING	PL : 6205zz OPL : 6204zz
20. MOUNTING	H O R I Z O N T A L
21. MAXIMUM AMBIENT TEMPERATURE	40 ℃
22. BEARING LUBRICATION	G R E A S E
23. STARTING METHOD	F U L L V O L T A G E

불법복제 및 배포금지

THREE PHASE INDUCTION MOTOR DATA SHEET

SCHEDULE OF TECHNICAL DATA

1. SERVICE	TRAVERSING
2. MANUFACTURE	극동 호이스트 (주)
3. FRAME NUMBER	90 S
4. RATED POWER	0.5 KW x 6 P
5. RATED VOLTAGE AND FREQUENCY	220 V 60 Hz
6. MOTOR TYPE	SQUIRREL CAGE ROTOR TYPE
7. SERVICE FACTOR AND RATTING	1 . 0 , 30 MIN
8. LOCATION AND INSULATION CLASS	INDOOR, OUTDOOR, B CLASS
9. DESIGN TEMPERATURE RISE(BY RESISTANCE)	80 ℃
10. FULL LOAD SPEED	1160 RPM
11. FULL LOAD CURRENT	3.4 A
12. STARTING CURRENT AT RATED VOLTAGE	16.4 A
13. MINIMUM STARTING VOLTAGE	200 V
14. EFFICIENCY AT 100% RATED LOAD	64.0 %
15. POWER FACTOR AT 100% RATED LOAD	59.5 %
16. STARTING TORQUE	0.80 KG.M
17. SITE ALTITUDE(UNDER)	1000 M
18. ENCLOSURE & COOLING METHOD	T E N V
19. TYPE OF BEARING	PL : 6205zz OPL : 6204zz
20. MOUNTING	H O R I Z O N T A L
21. MAXIMUM AMBIENT TEMPERATURE	40 ℃
22. BEARING LUBRICATION	G R E A S E
23. STARTING METHOD	F U L L V O L T A G E

불법복제 및 배포금지

THREE PHASE INDUCTION MOTOR DATA SHEET

SCHEDULE OF TECHNICAL DATA

1. SERVICE	TRAVERSING
2. MANUFACTURE	극동 호이스트 (주)
3. FRAME NUMBER	90 S
4. RATED POWER	0.5 KW x 6 P
5. RATED VOLTAGE AND FREQUENCY	380 V 60 Hz
6. MOTOR TYPE	SQUIRREL CAGE ROTOR TYPE
7. SERVICE FACTOR AND RATTING	1 . 0 , 30 MIN
8. LOCATION AND INSULATION CLASS	INDOOR, OUTDOOR, B CLASS
9. DESIGN TEMPERATURE RISE(BY RESISTANCE)	80 ℃
10. FULL LOAD SPEED	1160 RPM
11. FULL LOAD CURRENT	2.0 A
12. STARTING CURRENT AT RATED VOLTAGE	9.5 A
13. MINIMUM STARTING VOLTAGE	345 V
14. EFFICIENCY AT 100% RATED LOAD	64.0 %
15. POWER FACTOR AT 100% RATED LOAD	59.5 %
16. STARTING TORQUE	0.80 KG.M
17. SITE ALTITUDE(UNDER)	1000 M
18. ENCLOSURE & COOLING METHOD	T E N V
19. TYPE OF BEARING	PL : 6205zz OPL : 6204zz
20. MOUNTING	H O R I Z O N T A L
21. MAXIMUM AMBIENT TEMPERATURE	40 ℃
22. BEARING LUBRICATION	G R E A S E
23. STARTING METHOD	F U L L V O L T A G E

불법복제 및 배포금지

THREE PHASE INDUCTION MOTOR DATA SHEET

SCHEDULE OF TECHNICAL DATA

1. SERVICE	TRAVERSING
2. MANUFACTURE	극동 호이스트 (주)
3. FRAME NUMBER	90 S
4. RATED POWER	0.5 KW x 6 P
5. RATED VOLTAGE AND FREQUENCY	440 V 60 Hz
6. MOTOR TYPE	SQUIRREL CAGE ROTOR TYPE
7. SERVICE FACTOR AND RATTING	1 . 0 , 30 MIN
8. LOCATION AND INSULATION CLASS	INDOOR, OUTDOOR, B CLASS
9. DESIGN TEMPERATURE RISE(BY RESISTANCE)	80 ℃
10. FULL LOAD SPEED	1160 RPM
11. FULL LOAD CURRENT	1.7 A
12. STARTING CURRENT AT RATED VOLTAGE	8.2 A
13. MINIMUM STARTING VOLTAGE	400 V
14. EFFICIENCY AT 100% RATED LOAD	64.0 %
15. POWER FACTOR AT 100% RATED LOAD	59.5 %
16. STARTING TORQUE	0.80 KG.M
17. SITE ALTITUDE(UNDER)	1000 M
18. ENCLOSURE & COOLING METHOD	T E N V
19. TYPE OF BEARING	PL : 6205zz OPL : 6204zz
20. MOUNTING	H O R I Z O N T A L
21. MAXIMUM AMBIENT TEMPERATURE	40 ℃
22. BEARING LUBRICATION	G R E A S E
23. STARTING METHOD	F U L L V O L T A G E

불법복제 및 배포금지

THREE PHASE INDUCTION MOTOR DATA SHEET

SCHEDULE OF TECHNICAL DATA

1. SERVICE	TRAVERSING
2. MANUFACTURE	극동 호이스트 (주)
3. FRAME NUMBER	90 S
4. RATED POWER	0.5 KW x 6 P
5. RATED VOLTAGE AND FREQUENCY	460 V 60 Hz
6. MOTOR TYPE	SQUIRREL CAGE ROTOR TYPE
7. SERVICE FACTOR AND RATTING	1 . 0 , 30 MIN
8. LOCATION AND INSULATION CLASS	INDOOR, OUTDOOR, B CLASS
9. DESIGN TEMPERATURE RISE(BY RESISTANCE)	80 ℃
10. FULL LOAD SPEED	1160 RPM
11. FULL LOAD CURRENT	1.7 A
12. STARTING CURRENT AT RATED VOLTAGE	7.9 A
13. MINIMUM STARTING VOLTAGE	418 V
14. EFFICIENCY AT 100% RATED LOAD	64.0 %
15. POWER FACTOR AT 100% RATED LOAD	59.5 %
16. STARTING TORQUE	0.80 KG.M
17. SITE ALTITUDE(UNDER)	1000 M
18. ENCLOSURE & COOLING METHOD	T E N V
19. TYPE OF BEARING	PL : 6205zz OPL : 6204zz
20. MOUNTING	H O R I Z O N T A L
21. MAXIMUM AMBIENT TEMPERATURE	40 ℃
22. BEARING LUBRICATION	G R E A S E
23. STARTING METHOD	F U L L V O L T A G E

불법복제 및 배포금지

THREE PHASE INDUCTION MOTOR DATA SHEET

SCHEDULE OF TECHNICAL DATA

1. SERVICE	TRAVERSING
2. MANUFACTURE	극동 호이스트 (주)
3. FRAME NUMBER	90 S
4. RATED POWER	0.5 KW x 6 P
5. RATED VOLTAGE AND FREQUENCY	480 V 60 Hz
6. MOTOR TYPE	SQUIRREL CAGE ROTOR TYPE
7. SERVICE FACTOR AND RATTING	1 . 0 , 30 MIN
8. LOCATION AND INSULATION CLASS	INDOOR, OUTDOOR, B CLASS
9. DESIGN TEMPERATURE RISE(BY RESISTANCE)	80 ℃
10. FULL LOAD SPEED	1160 RPM
11. FULL LOAD CURRENT	1.6 A
12. STARTING CURRENT AT RATED VOLTAGE	7.5 A
13. MINIMUM STARTING VOLTAGE	436 V
14. EFFICIENCY AT 100% RATED LOAD	64.0 %
15. POWER FACTOR AT 100% RATED LOAD	59.5 %
16. STARTING TORQUE	0.80 KG.M
17. SITE ALTITUDE(UNDER)	1000 M
18. ENCLOSURE & COOLING METHOD	T E N V
19. TYPE OF BEARING	PL : 6205zz OPL : 6204zz
20. MOUNTING	H O R I Z O N T A L
21. MAXIMUM AMBIENT TEMPERATURE	40 ℃
22. BEARING LUBRICATION	G R E A S E
23. STARTING METHOD	F U L L V O L T A G E

불법복제 및 배포금지

THREE PHASE INDUCTION MOTOR DATA SHEET

SCHEDULE OF TECHNICAL DATA

1. SERVICE	TRAVERSING
2. MANUFACTURE	극동 호이스트 (주)
3. FRAME NUMBER	90 M
4. RATED POWER	0.8 / 0.4 KW x 4 / 8 P
5. RATED VOLTAGE AND FREQUENCY	220 V 60 Hz
6. MOTOR TYPE	SQUIRREL CAGE ROTOR TYPE
7. SERVICE FACTOR AND RATTING	1 . 0 , 30 MIN
8. LOCATION AND INSULATION CLASS	INDOOR, OUTDOOR, B CLASS
9. DESIGN TEMPERATURE RISE(BY RESISTANCE)	80 ℃
10. FULL LOAD SPEED	1750 / 850 RPM
11. FULL LOAD CURRENT	4.8 / 4.25 A
12. LOCKED ROTOR CURRENT	14.2 / 13.6 A
13. MINIMUM STARTING VOLTAGE	200 V
14. EFFICIENCY AT 100% RATED LOAD	72.8 / 65.8 %
15. POWER FACTOR AT 100% RATED LOAD	82.3 / 75.0 %
16. FULL LOAD TORQUE	0.80 KG.M
17. SITE ALTITUDE(UNDER)	1000 M
18. ENCLOSURE & COOLING METHOD	T E N V
19. TYPE OF BEARING	PL : 6205zz OPL : 6204zz
20. MOUNTING	H O R I Z O N T A L
21. MAXIMUM AMBIENT TEMPERATURE	40 ℃
22. BEARING LUBRICATION	G R E A S E
23. STARTING METHOD	F U L L V O L T A G E

불법복제 및 배포금지

THREE PHASE INDUCTION MOTOR DATA SHEET

SCHEDULE OF TECHNICAL DATA

1. SERVICE	TRAVERSING
2. MANUFACTURE	극동 호이스트 (주)
3. FRAME NUMBER	90 M
4. RATED POWER	0.8 / 0.4 KW x 4 / 8 P
5. RATED VOLTAGE AND FREQUENCY	380 V 60 Hz
6. MOTOR TYPE	SQUIRREL CAGE ROTOR TYPE
7. SERVICE FACTOR AND RATTING	1 . 0 , 30 MIN
8. LOCATION AND INSULATION CLASS	INDOOR, OUTDOOR, B CLASS
9. DESIGN TEMPERATURE RISE(BY RESISTANCE)	80 ℃
10. FULL LOAD SPEED	1750 / 850 RPM
11. FULL LOAD CURRENT	2.78 / 2.63 A
12. LOCKED ROTOR CURRENT	9.2 / 6.3 A
13. MINIMUM STARTING VOLTAGE	345 V
14. EFFICIENCY AT 100% RATED LOAD	72.8 / 65.8 %
15. POWER FACTOR AT 100% RATED LOAD	82.3 / 75.0 %
16. FULL LOAD TORQUE	0.80 KG.M
17. SITE ALTITUDE(UNDER)	1000 M
18. ENCLOSURE & COOLING METHOD	T E N V
19. TYPE OF BEARING	PL : 6205zz OPL : 6204zz
20. MOUNTING	H O R I Z O N T A L
21. MAXIMUM AMBIENT TEMPERATURE	40 ℃
22. BEARING LUBRICATION	G R E A S E
23. STARTING METHOD	F U L L V O L T A G E

불법복제 및 배포금지

THREE PHASE INDUCTION MOTOR DATA SHEET

SCHEDULE OF TECHNICAL DATA

1. SERVICE	TRAVERSING
2. MANUFACTURE	극동 호이스트 (주)
3. FRAME NUMBER	90 M
4. RATED POWER	0.8 / 0.4 KW x 4 / 8 P
5. RATED VOLTAGE AND FREQUENCY	440 V 60 Hz
6. MOTOR TYPE	SQUIRREL CAGE ROTOR TYPE
7. SERVICE FACTOR AND RATTING	1 . 0 , 30 MIN
8. LOCATION AND INSULATION CLASS	INDOOR, OUTDOOR, B CLASS
9. DESIGN TEMPERATURE RISE(BY RESISTANCE)	80 ℃
10. FULL LOAD SPEED	1750 / 850 RPM
11. FULL LOAD CURRENT	2.4 / 2.27 A
12. LOCKED ROTOR CURRENT	8.6 / 6.2 A
13. MINIMUM STARTING VOLTAGE	400 V
14. EFFICIENCY AT 100% RATED LOAD	72.8 / 65.8 %
15. POWER FACTOR AT 100% RATED LOAD	82.3 / 75.0 %
16. FULL LOAD TORQUE	0.80 KG.M
17. SITE ALTITUDE(UNDER)	1000 M
18. ENCLOSURE & COOLING METHOD	T E N V
19. TYPE OF BEARING	PL : 6205zz OPL : 6204zz
20. MOUNTING	H O R I Z O N T A L
21. MAXIMUM AMBIENT TEMPERATURE	40 ℃
22. BEARING LUBRICATION	G R E A S E
23. STARTING METHOD	F U L L V O L T A G E

불법복제 및 배포금지

THREE PHASE INDUCTION MOTOR DATA SHEET

SCHEDULE OF TECHNICAL DATA

1. SERVICE	TRAVERSING
2. MANUFACTURE	극동 호이스트 (주)
3. FRAME NUMBER	90 M
4. RATED POWER	0.8 / 0.4 KW x 4 / 8 P
5. RATED VOLTAGE AND FREQUENCY	460 V 60 Hz
6. MOTOR TYPE	SQUIRREL CAGE ROTOR TYPE
7. SERVICE FACTOR AND RATTING	1 . 0 , 30 MIN
8. LOCATION AND INSULATION CLASS	INDOOR, OUTDOOR, B CLASS
9. DESIGN TEMPERATURE RISE(BY RESISTANCE)	80 ℃
10. FULL LOAD SPEED	1750 / 850 RPM
11. FULL LOAD CURRENT	2.3 / 2.17 A
12. LOCKED ROTOR CURRENT	8.5 / 6.2 A
13. MINIMUM STARTING VOLTAGE	418 V
14. EFFICIENCY AT 100% RATED LOAD	72.8 / 65.8 %
15. POWER FACTOR AT 100% RATED LOAD	82.3 / 75.0 %
16. FULL LOAD TORQUE	0.80 KG.M
17. SITE ALTITUDE(UNDER)	1000 M
18. ENCLOSURE & COOLING METHOD	T E N V
19. TYPE OF BEARING	PL : 6205zz OPL : 6204zz
20. MOUNTING	H O R I Z O N T A L
21. MAXIMUM AMBIENT TEMPERATURE	40 ℃
22. BEARING LUBRICATION	G R E A S E
23. STARTING METHOD	F U L L V O L T A G E

불법복제 및 배포금지

THREE PHASE INDUCTION MOTOR DATA SHEET

SCHEDULE OF TECHNICAL DATA

1. SERVICE	TRAVERSING
2. MANUFACTURE	극동 호이스트 (주)
3. FRAME NUMBER	90 M
4. RATED POWER	0.8 / 0.4 KW x 4 / 8 P
5. RATED VOLTAGE AND FREQUENCY	480 V 60 Hz
6. MOTOR TYPE	SQUIRREL CAGE ROTOR TYPE
7. SERVICE FACTOR AND RATTING	1 . 0 , 30 MIN
8. LOCATION AND INSULATION CLASS	INDOOR, OUTDOOR, B CLASS
9. DESIGN TEMPERATURE RISE(BY RESISTANCE)	80 ℃
10. FULL LOAD SPEED	1750 / 850 RPM
11. FULL LOAD CURRENT	2.3 / 2.1 A
12. LOCKED ROTOR CURRENT	8.4 / 6.15 A
13. MINIMUM STARTING VOLTAGE	436 V
14. EFFICIENCY AT 100% RATED LOAD	72.8 / 65.8 %
15. POWER FACTOR AT 100% RATED LOAD	82.3 / 75.0 %
16. FULL LOAD TORQUE	0.80 KG.M
17. SITE ALTITUDE(UNDER)	1000 M
18. ENCLOSURE & COOLING METHOD	T E N V
19. TYPE OF BEARING	PL : 6205zz OPL : 6204zz
20. MOUNTING	H O R I Z O N T A L
21. MAXIMUM AMBIENT TEMPERATURE	40 ℃
22. BEARING LUBRICATION	G R E A S E
23. STARTING METHOD	F U L L V O L T A G E

불법복제 및 배포금지

THREE PHASE INDUCTION MOTOR DATA SHEET

SCHEDULE OF TECHNICAL DATA

1. SERVICE	TRAVERSING
2. MANUFACTURE	극동 호이스트 (주)
3. FRAME NUMBER	90 L
4. RATED POWER	0.5/0.25 KW x 6/12 P
5. RATED VOLTAGE AND FREQUENCY	220 V 60 Hz
6. MOTOR TYPE	SQUIRREL CAGE ROTOR TYPE
7. SERVICE FACTOR AND RATTING	1 . 0 , 30 MIN
8. LOCATION AND INSULATION CLASS	INDOOR, OUTDOOR, B CLASS
9. DESIGN TEMPERATURE RISE(BY RESISTANCE)	80 ℃
10. FULL LOAD SPEED	1050/460 RPM
11. FULL LOAD CURRENT	3.2/3.6 A
12. STARTING CURRENT AT RATED VOLTAGE	12.8/10.8 A
13. MINIMUM STARTING VOLTAGE	200 V
14. EFFICIENCY AT 100% RATED LOAD	57.5/35 %
15. POWER FACTOR AT 100% RATED LOAD	64.5/50 %
16. STARTING TORQUE	0.757/0.506 KG.M
17. SITE ALTITUDE(UNDER)	1000 M
18. ENCLOSURE & COOLING METHOD	T E N V
19. TYPE OF BEARING	PL : 6205zz OPL : 6204zz
20. MOUNTING	H O R I Z O N T A L
21. MAXIMUM AMBIENT TEMPERATURE	40 ℃
22. BEARING LUBRICATION	G R E A S E
23. STARTING METHOD	F U L L V O L T A G E

불법복제 및 배포금지

THREE PHASE INDUCTION MOTOR DATA SHEET

SCHEDULE OF TECHNICAL DATA

1. SERVICE	TRAVERSING
2. MANUFACTURE	극동 호이스트 (주)
3. FRAME NUMBER	90 L
4. RATED POWER	0.5/0.25 KW x 6/12 P
5. RATED VOLTAGE AND FREQUENCY	380 V 60 Hz
6. MOTOR TYPE	SQUIRREL CAGE ROTOR TYPE
7. SERVICE FACTOR AND RATTING	1 . 0 , 30 MIN
8. LOCATION AND INSULATION CLASS	INDOOR, OUTDOOR, B CLASS
9. DESIGN TEMPERATURE RISE(BY RESISTANCE)	80 ℃
10. FULL LOAD SPEED	1050/460 RPM
11. FULL LOAD CURRENT	3.2/3.6 A
12. STARTING CURRENT AT RATED VOLTAGE	12.8/10.8 A
13. MINIMUM STARTING VOLTAGE	200 V
14. EFFICIENCY AT 100% RATED LOAD	57.5/35 %
15. POWER FACTOR AT 100% RATED LOAD	64.5/50 %
16. STARTING TORQUE	0.757/0.506 KG.M
17. SITE ALTITUDE(UNDER)	1000 M
18. ENCLOSURE & COOLING METHOD	T E N V
19. TYPE OF BEARING	PL : 6205zz OPL : 6204zz
20. MOUNTING	H O R I Z O N T A L
21. MAXIMUM AMBIENT TEMPERATURE	40 ℃
22. BEARING LUBRICATION	G R E A S E
23. STARTING METHOD	F U L L V O L T A G E

불법복제 및 배포금지

THREE PHASE INDUCTION MOTOR DATA SHEET

SCHEDULE OF TECHNICAL DATA

1. SERVICE	TRAVERSING
2. MANUFACTURE	극동 호이스트 (주)
3. FRAME NUMBER	90 L
4. RATED POWER	0.5/0.25 KW x 6/12 P
5. RATED VOLTAGE AND FREQUENCY	440 V 60 Hz
6. MOTOR TYPE	SQUIRREL CAGE ROTOR TYPE
7. SERVICE FACTOR AND RATTING	1 . 0 , 30 MIN
8. LOCATION AND INSULATION CLASS	INDOOR, OUTDOOR, B CLASS
9. DESIGN TEMPERATURE RISE(BY RESISTANCE)	80 ℃
10. FULL LOAD SPEED	1050/460 RPM
11. FULL LOAD CURRENT	3.2/3.6 A
12. STARTING CURRENT AT RATED VOLTAGE	12.8/10.8 A
13. MINIMUM STARTING VOLTAGE	200 V
14. EFFICIENCY AT 100% RATED LOAD	57.5/35 %
15. POWER FACTOR AT 100% RATED LOAD	64.5/50 %
16. STARTING TORQUE	0.757/0.506 KG.M
17. SITE ALTITUDE(UNDER)	1000 M
18. ENCLOSURE & COOLING METHOD	T E N V
19. TYPE OF BEARING	PL : 6205zz OPL : 6204zz
20. MOUNTING	H O R I Z O N T A L
21. MAXIMUM AMBIENT TEMPERATURE	40 ℃
22. BEARING LUBRICATION	G R E A S E
23. STARTING METHOD	F U L L V O L T A G E

불법복제 및 배포금지

THREE PHASE INDUCTION MOTOR DATA SHEET

SCHEDULE OF TECHNICAL DATA

1. SERVICE	TRAVERSING
2. MANUFACTURE	극동 호이스트 (주)
3. FRAME NUMBER	90 L
4. RATED POWER	0.5/0.25 KW x 6/12 P
5. RATED VOLTAGE AND FREQUENCY	460 V 60 Hz
6. MOTOR TYPE	SQUIRREL CAGE ROTOR TYPE
7. SERVICE FACTOR AND RATTING	1 . 0 , 30 MIN
8. LOCATION AND INSULATION CLASS	INDOOR, OUTDOOR, B CLASS
9. DESIGN TEMPERATURE RISE(BY RESISTANCE)	80 ℃
10. FULL LOAD SPEED	1050/460 RPM
11. FULL LOAD CURRENT	3.2/3.6 A
12. STARTING CURRENT AT RATED VOLTAGE	12.8/10.8 A
13. MINIMUM STARTING VOLTAGE	200 V
14. EFFICIENCY AT 100% RATED LOAD	57.5/35 %
15. POWER FACTOR AT 100% RATED LOAD	64.5/50 %
16. STARTING TORQUE	0.757/0.506 KG.M
17. SITE ALTITUDE(UNDER)	1000 M
18. ENCLOSURE & COOLING METHOD	T E N V
19. TYPE OF BEARING	PL : 6205zz OPL : 6204zz
20. MOUNTING	H O R I Z O N T A L
21. MAXIMUM AMBIENT TEMPERATURE	40 ℃
22. BEARING LUBRICATION	G R E A S E
23. STARTING METHOD	F U L L V O L T A G E

불법복제 및 배포금지

THREE PHASE INDUCTION MOTOR DATA SHEET

SCHEDULE OF TECHNICAL DATA

1. SERVICE	TRAVERSING
2. MANUFACTURE	극동 호이스트 (주)
3. FRAME NUMBER	90 L
4. RATED POWER	0.5/0.25 KW x 6/12 P
5. RATED VOLTAGE AND FREQUENCY	480 V 60 Hz
6. MOTOR TYPE	SQUIRREL CAGE ROTOR TYPE
7. SERVICE FACTOR AND RATTING	1 . 0 , 30 MIN
8. LOCATION AND INSULATION CLASS	INDOOR, OUTDOOR, B CLASS
9. DESIGN TEMPERATURE RISE(BY RESISTANCE)	80 ℃
10. FULL LOAD SPEED	1050/460 RPM
11. FULL LOAD CURRENT	3.2/3.6 A
12. STARTING CURRENT AT RATED VOLTAGE	12.8/10.8 A
13. MINIMUM STARTING VOLTAGE	200 V
14. EFFICIENCY AT 100% RATED LOAD	57.5/35 %
15. POWER FACTOR AT 100% RATED LOAD	64.5/50 %
16. STARTING TORQUE	0.757/0.506 KG.M
17. SITE ALTITUDE(UNDER)	1000 M
18. ENCLOSURE & COOLING METHOD	T E N V
19. TYPE OF BEARING	PL : 6205zz OPL : 6204zz
20. MOUNTING	H O R I Z O N T A L
21. MAXIMUM AMBIENT TEMPERATURE	40 ℃
22. BEARING LUBRICATION	G R E A S E
23. STARTING METHOD	F U L L V O L T A G E

불법복제 및 배포금지

KISWIRE

INVOICE NO. 2013 - 11 - 264 / PW13058 DATE *19. Nov, 2013*

MILL TEST CERTIFICATE

THIS IS TO CERTIFY THAT THE MATERIAL DESCRIBED BELOW WAS MANUFACTURED IN ACCORDANCE WITH KISWIRE SPECIFICATION AND APPLICABLE SECTIONS

OF KSD 3514 - 2002 (B Grade)

TO MESSRS KISWIRE LTD

MATERIAL DESCRIPTION UNGALVANIZED STEEL WIRE ROPE

6 x 36 WS - FC 2,000.00 M x 1 REEL

TYPE CONTAINER CRANE ROPE

EX NO. PW13058-1 FACTORY NO. 201306WRM00943

ORDER NO. BUSAN STOCK-3/4 2013 (AUG) REEL NO. 5 SAMPLING NO. 5

DIAMETER OF ROPE 09.00 mm

TYPE OF CORE FIBRE CORE SPECIFIED NOMINAL

BREAKING STRENGTH 48.00 kN SAMPLE BROKE AT 55.50 kN

WT OF ZINC COATING OF OUTER WIRE MIN. g/m²

ROPE LAY sZ (RHRL,OZ) LAY LENGTH 58.70 mm

LUBRICATION A-3

CHEMICAL ANALYSIS OF WIRE ROD

CHARGE NO.	C X 100	Si X 100	Mn X 100	P X 1000	S X 1000
SD51272411	70	21	56	6	12

ISO 9001 REGISTERED

ABS TYPE APPROVAL PROGRAM

DATE OF SAMPLE TEST *29. Sep, 2013*

Approved by Q.A Manager Mr. Zamri Ja'afar
KISWIRE